Installation & Owner's Manual

AprilAire

Model

E050W, E070W, E080W, E100W & E130W

50, 70, 80, 100, and 130 PPD Professional-Grade, Whole-House Dehumidifiers

Installed By:	Installer Phone:	Date Installed:

Most Efficient 2025 ENERGY STAR www.energystar.gov

PLEASE LEAVE THIS MANUAL WITH THE DEHUMIDIFIER OWNER

Table of Contents

Safety Instructions 2

Operating the Dehumidifier 3
- Energy Savings Tips 3

Connect to Home Network and Cloud on the Control 4

Connect to Home Network and Cloud on the App 4

Manual Connecting Instructions 6

Turning On Dehumidification 8

Humidity Set Point Adjustment 8

Maintenance 9
- Cleaning the Filter 9
- Cleaning the Drain 10

Preparing the Unit for Installation 11
- Repositioning the User Interface for the Application 11

Wiring 12
- Wiring to the HVAC System 12
- Wiring to External or Remote Control 12
- Wiring to a Float Switch 13

Ventilation 13
- Sequence of Operation 14

Installer Set-up 15
- Entering Installer Settings Menu 15
- Installer Wizard 15
- Basic Set-up 15
- Advanced Set-up 15
- IAQ Set-up 16
- Setting Up Remote Control and External Control 16
- Setting Up Ventilation / Air Cycling 16
- Applying an RH Offset 17
- Enabling DEH w/AC 17

Connecting a Wireless Sensor 17

Installer Test Mode 18
- Dehumidification Only 18
- Ventilation 18

Starting Up the Unit and Sequence of Operation 19
- Using the Dehumidifier Control Only 19
- Using a Model 76 as a Remote Control 20
- Using an External Control 20

Service Instructions 21

Troubleshooting 22

Wi-Fi Maintenance and Troubleshooting 27

Service Parts 28

EULA Statement 32

FCC and ISED Compliance Statements 32

How to Access FCC and IC IDs 32

Limited Warranty 32

Safety Instructions

⚠ WARNING

ATTENTION INSTALLER:

- Read this manual before installing. Improper installation or maintenance may cause property damage or injury. It is recommended that installation, service, and maintenance be performed by a trained service technician. This product must be installed in compliance with all local, state, and federal codes.
- All safety precautions must be followed.
- Dispose of properly in accordance with federal or local regulations.

ELECTRIC SHOCK HAZARD:

- **120 volts may cause serious injury from electric shock.** Disconnect electrical power to the dehumidifier before starting installation or servicing. Leave power disconnected until installation/service is completed.
- **To reduce the risk of electrical shock,** this equipment has a grounding-type (three prong) plug. This plug will fit only into a grounding-type power outlet. If the plug does not fit into the outlet, contact qualified personnel to install the proper outlet. Do not alter this plug in any way.
- **To reduce the risk of electrical shock,** position the product so that the power cord can be plugged into an electrical outlet without the use of an extension cord.

RISK OF FIRE OR EXPLOSION:

- Flammable refrigerant used. Do not puncture refrigerant tubing.
- Store in well ventilated room without continuously operating flames or other potential ignition sources.
- Auxiliary devices which may be ignition sources shall not be installed in duct work.

⚠ CAUTION

- **SHARP EDGES MAY CAUSE INJURY FROM CUTS.** Use care when cutting plenum openings and handling ductwork. Always wear glasses/goggles and gloves when installing the unit.
- **TWO-PERSON LIFT REQUIRED.** Dropping may cause personal injury or equipment damage. Handle with care and follow installation instructions.
- This unit is not intended for use by persons (including children) with reduced physical, sensory, or mental capabilities, or lack of experience and knowledge, unless they have been given supervision or instruction concerning use of the unit by a person responsible for their safety.
- Be sure to supervise children to ensure that they do not play with the unit.
- Be sure to replace a damaged supply cord. It must be replaced by a special cord or assembly available from the manufacturer or its service agent.
- Never operate electrical equipment in standing water.
- Do not stick your fingers or other objects through the safety grills.
- Do not sit or stand on the unit, or use the unit as a table or shelf.
- The unit is designed to be installed indoors only.
- Always place in well ventilated area to prevent the accumulation of refrigerant in the case of a refrigerant system leak or failure.

NOTICE

EQUIPMENT DAMAGE MAY OCCUR IF INSTALLATION INSTRUCTIONS ARE NOT FOLLOWED.

- Do not use in pool applications. Pool chemicals can damage the dehumidifier.
- Do not use solvents or cleaners on or near the display and circuit board. Chemicals can damage components.
- Wait 24 hours before running the unit if it was not shipped or stored in the upright position.
- Do not use dehumidification to prevent window condensation in the winter. To address window condensation, use ventilation to lower indoor humidity in the winter.
- Running the dehumidifier without the drain insert can lead to condensate leaks.

ELECTRICAL INTERFERENCE CAN CAUSE OUTDOOR TEMPERATURE SENSOR INACCURACY.

- Do not run Outdoor Temperature Sensor alongside wires carrying high voltage (120 VAC or higher).
- Do not run Outdoor Temperature Sensor wire lengths greater than 300 feet.

Operating the Dehumidifier

If equipped, use the ON/OFF power switch, located by the power cord, to apply power to the dehumidifier.

NOTE: The unit can remain plugged in with an ON/OFF power switch on, unless the unit will not be used for an extended period. Use the ON/OFF toggle on the user interface to turn the unit off for short durations (see step 2 of **TURNING ON DEHUMIDIFICATION – ON THE UNIT** on page 8). When the unit is idle (neither the fan nor the compressor running) the unit will use less than 3W of power.

FIGURE 1: EXTERIOR COMPONENTS OF THE DEHUMIDIFIER

A. USER INTERFACE

B. FILTER ACCESS DOOR

ENERGY SAVINGS TIPS

ENERGY SAVINGS TIP #1:

Adjust the humidity setting to be as high as is comfortable to reduce dehumidifier run time. If it feels clammy or "smells musty," lower the humidity setting. To save energy, turn the dehumidifier to OFF when you open your windows, just as you would with air conditioning.

ENERGY SAVINGS TIP #2:

If vacating your home for an extended period in the summer, set the RH at 55% and set your thermostat as high as you are comfortable setting it to in the cooling mode. This will keep the humidity at a controlled level while minimizing the amount of cooling energy used.

Connect to Home Network and Cloud on the Control

POWER ON THE CONTROL

When the control is powered, you should see the Bluetooth symbol, in the top left part of the display.

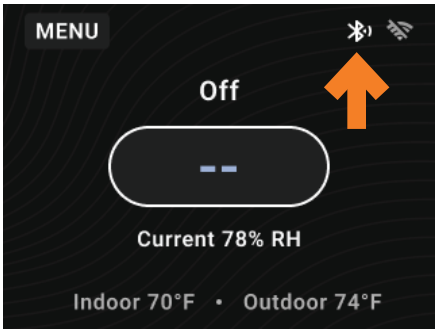

NOTE: Bluetooth will be ON for one hour at the time of power up, and then it will turn off.

RESTART BLUETOOTH

If the Bluetooth symbol isn't showing, choose one of the following two methods to restart the dehumidifier's Bluetooth connection.

1. Cycle power to the dehumidifier unit.
2. Manually restart Bluetooth through the Menu.

   a. Navigate to the **MENU**, and select.

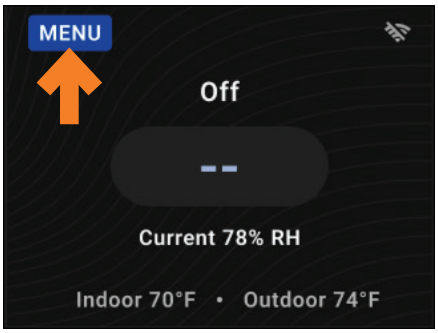

   b. Navigate to **Bluetooth**, and select.

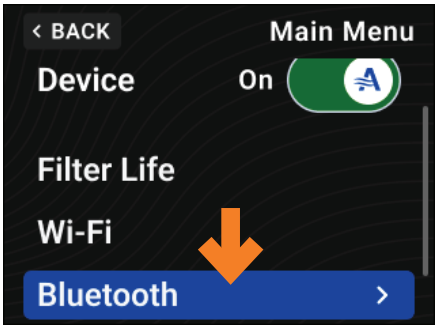

   c. Navigate to **Pairing Mode**, and toggle **On**.

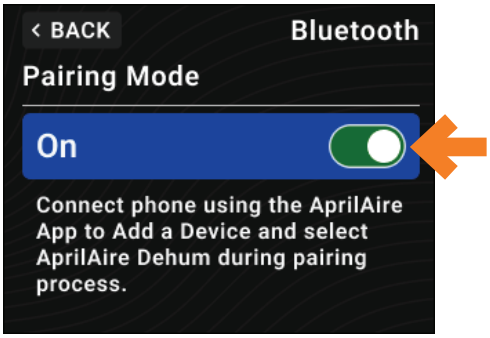

3. Continue to the App.

Connect to Home Network and Cloud on the App

DOWNLOAD THE APP

Search and install the **AprilAire Healthy Air App** and create an account.*

GET IT ON Google Play

Download on the App Store

CONNECT TO WI-FI

Refer to the images on the following page.

1. Add the product by selecting **+** icon or **Add a Product** button.
2. Select **Dehumidifiers** and then select the Wi-Fi dehumidifier option (e.g., E070W).
3. When **AprilAire Dehum** is available on the **Pair Device** page, select **Connect**. To complete the Bluetooth connection, follow the phones pairing prompts.
4. **NOTE:** If no devices are found or pairing is unsuccessful, follow troubleshooting given on the app.
5. Find and select the Wi-Fi network to connect to.
6. Enter in the Wi-Fi network's password, and select **Connect**.
7. Wait for success!

NOTE: If a provisioning incomplete display is shown, try again and take note.

If a red **Failed to...** page displays, this indicates that something went wrong with trying to connect. See **TABLE 1**.

**Not all previous versions of Android or iOS are supported.*

TABLE 1: TROUBLESHOOTING

Failure to connect to Wi-Fi network	Failure to connect to AprilAire account	Failure to connect to AprilAire cloud
This page will prompt the failure. For example, it will inform if the password for the Wi-Fi network was the failure.	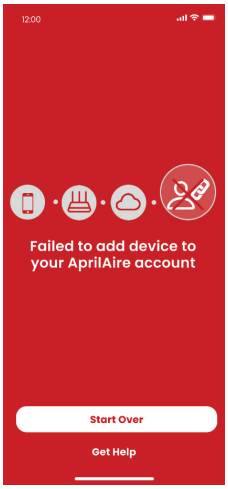 This failure may indicate that the account isn't fully setup (finishing the setup will resolve the failure) or the control is already connected to an AprilAire account (Referencing the Wi-Fi Dehumidifier IOM follow the process to unregistering the control on the UI will resolve this failure).	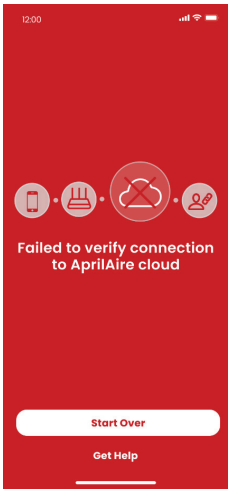 This failure may indicate that the control is already connected to an AprilAire account (This failure may indicate that the account isn't fully setup (finishing the setup will resolve the failure) or the control is already connected to an AprilAire account (At the control, unregistering the control will resolve this failure).

Manual Connecting Instructions

1. Navigate and select **MENU**.

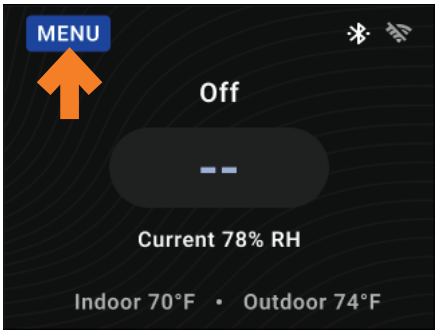

2. Navigate and select **Wi-Fi**.

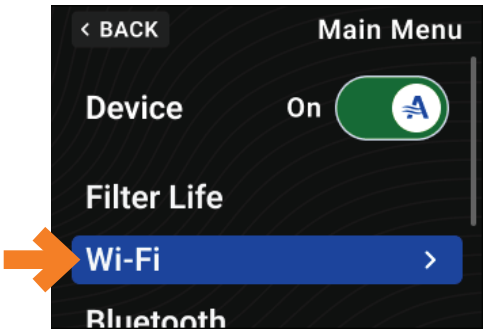

3. Navigate and select **Connect Wi-Fi**.

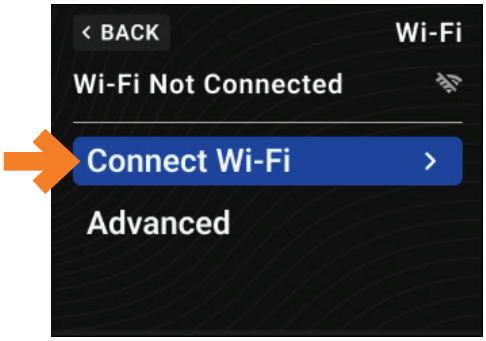

4. Navigate and select the Wi-Fi network to connect to.

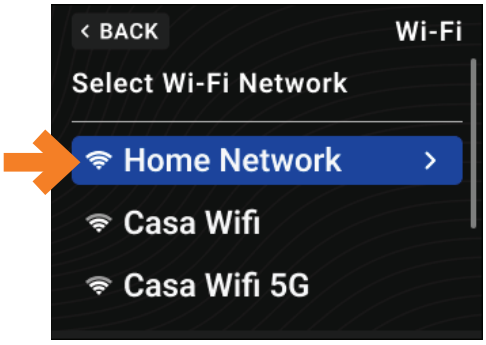

5. Enter Wi-Fi network password and select **ENTER** when ready.

6. Enter the IP Settings **DHCP** or **Static**.

7. Review the network information and scroll to the bottom and select **Connect**.

8. The control will verify Wi-Fi network connection and cloud connection and revert back to the **Wi-Fi** menu when complete.

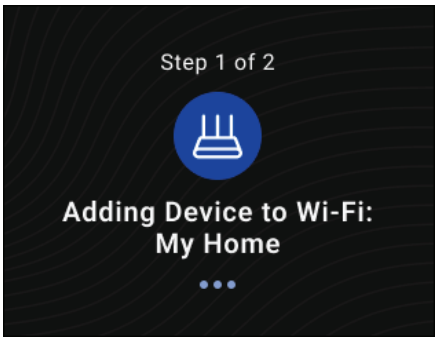

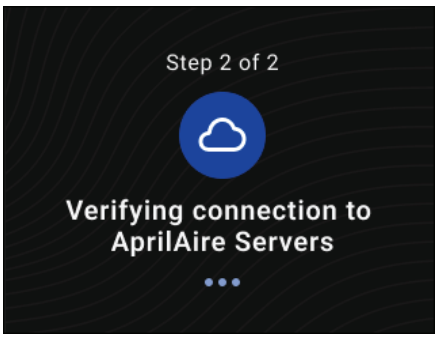

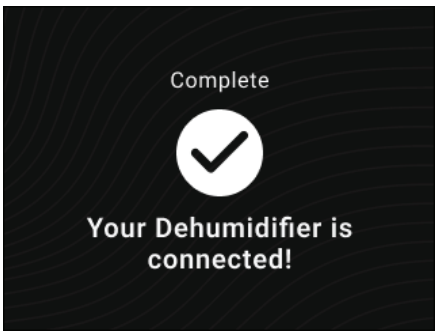

The Dehumidifier control is now connected to Wi-Fi. Follow the remaining steps, to associate the Wi-Fi Dehumidifier to the AprilAire account.

9. Navigate and select **MENU**.

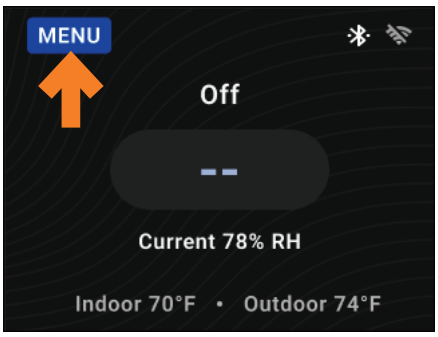

10. Navigate and select **Wi-Fi**.

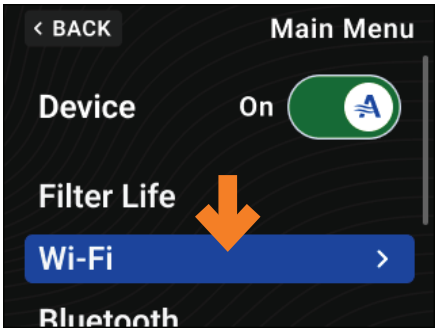

11. Navigate and select **Wi-Fi Details**.

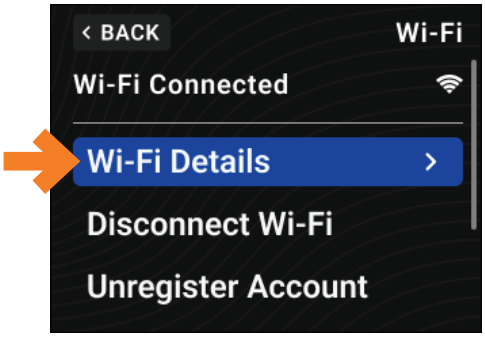

12. Scroll down until the MAC ID (MAC Address) is visible, and record it. It will be 12 characters (e.g., XX XX XX XX XX XX).

13. Open the App and tap **Add A Product** text. Select **Dehumidifiers** and then select a dehumidifier option (e.g., E070W).

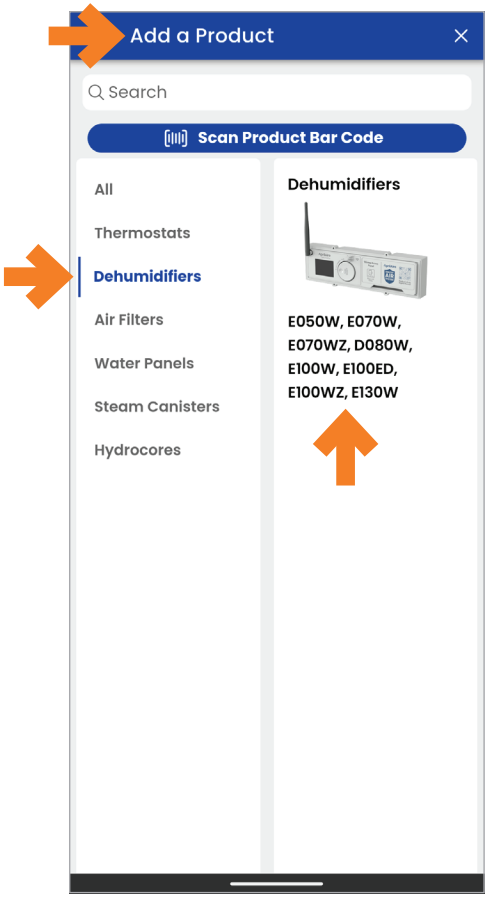

14. Select **OTHER OPTIONS**.

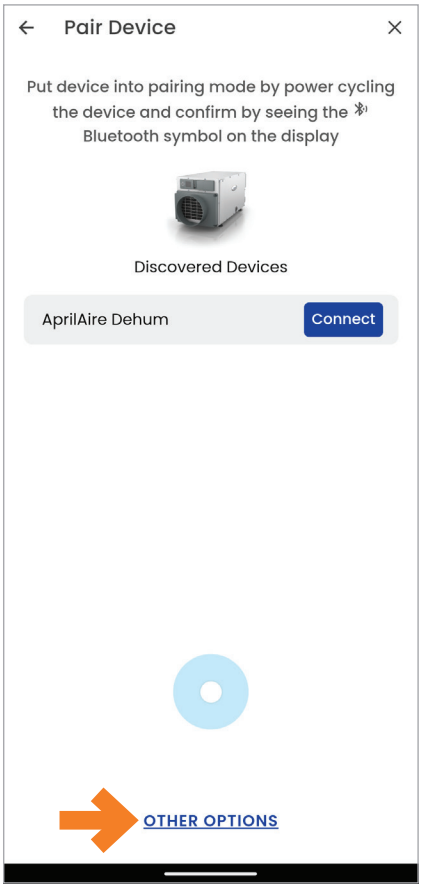

15. Enter the MAC ID (MAC Address), without colons, recorded in step 12 and press **Continue**.

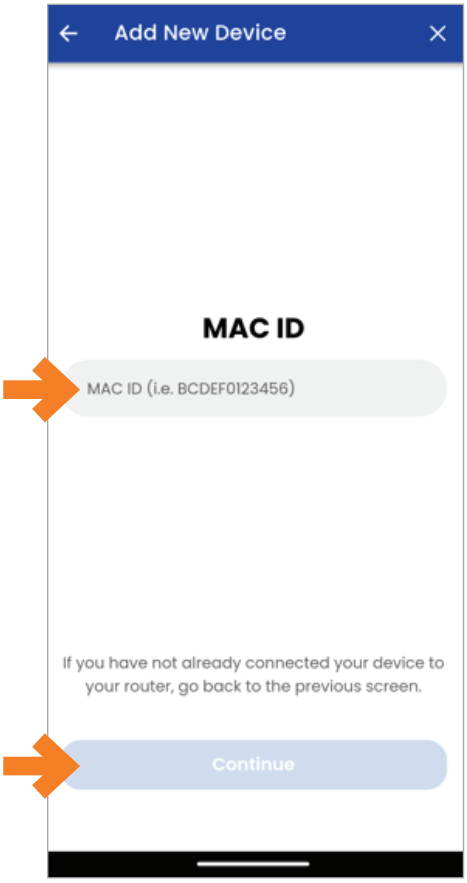

16. Wait for success!

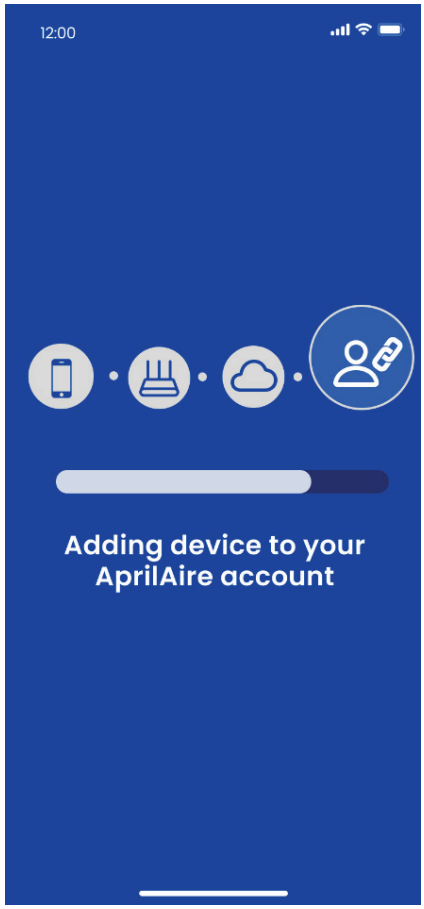

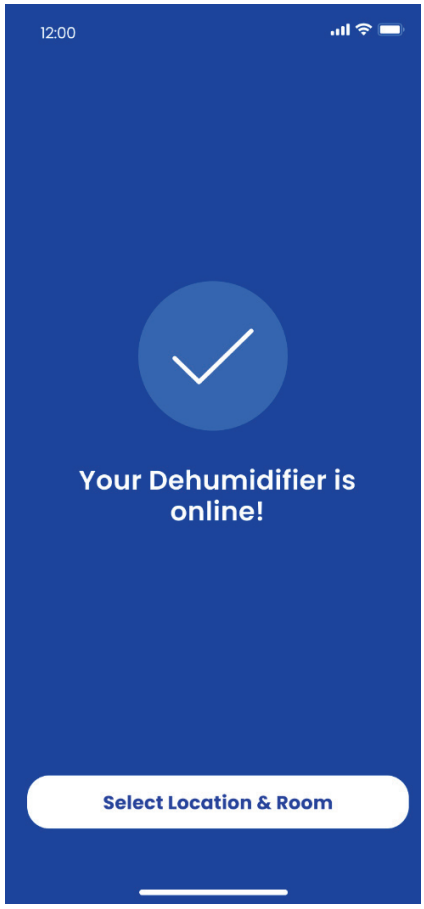

Turning On Dehumidification

ON THE UNIT

1. Navigate to and select **MENU** to advance to the **Main Menu**.

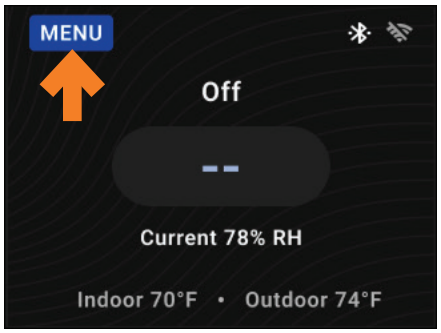

2. Then, with the knob, turn to select **Device On/Off** toggle to turn the dehumidifier on.

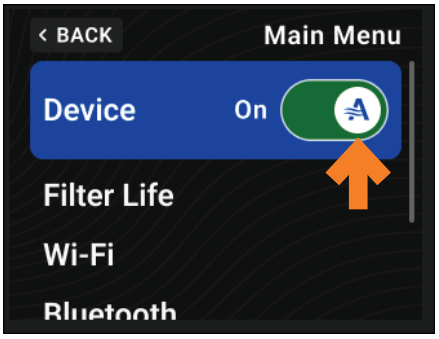

ON THE APP (WI-FI CONNECTED ONLY)

1. Select the Dehumidifier card.

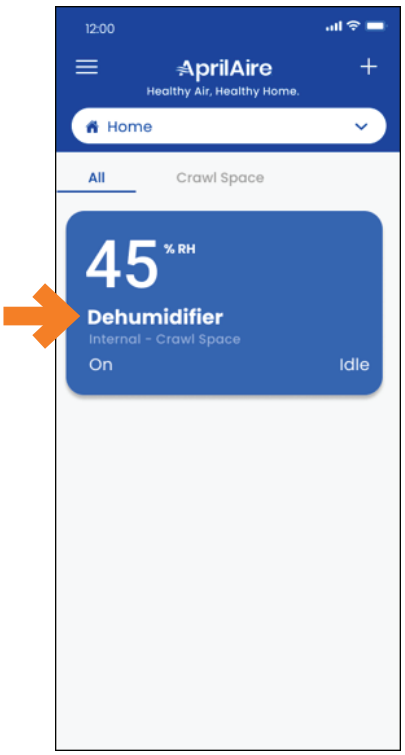

2. Select the **Power** icon at the bottom.

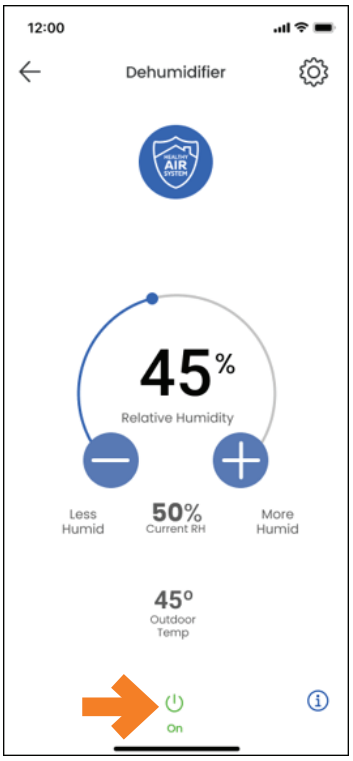

Humidity Set Point Adjustment

ON THE UNIT

NOTE: Dehumidificaton must be **On** to adjust the humidity set point. See **TURNING ON DEHUMIDIFICATION** section.

1. Navigate to the current humidity set point and select with the knob, enter the **Set Point Adjustment Page**.

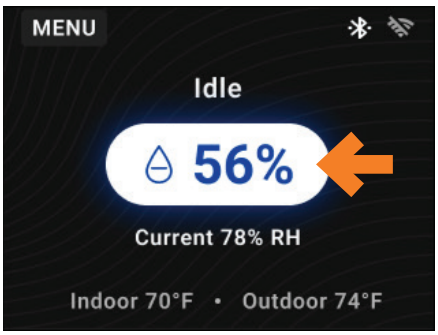

2. Using the knob, turn it clockwise to increase the humidity set point or counterclockwise to decrease the humidity set point.

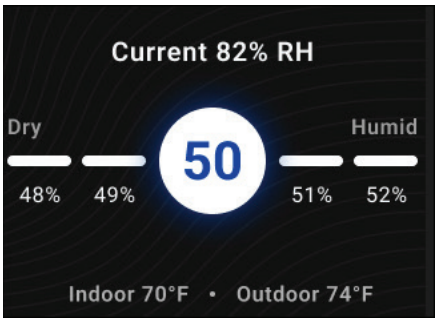

3. To select the new humidity set point to dehumidify to, select with the knob. This will transition back to the **Home Page**.

ON THE APP (WI-FI CONNECTED ONLY)

System Control Source set as **Internal** (see set up instructions)

1. Select the Dehumidifier card.

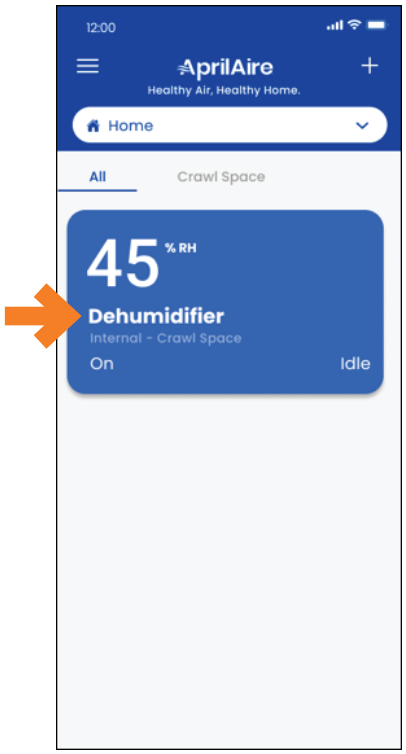

2. Select the **+** or **–** icons to adjust the humidity set point.

   NOTE: Dehumidificaton must be **On** to adjust the humidity set point. See **TURNING ON DEHUMIDIFICATION** section.

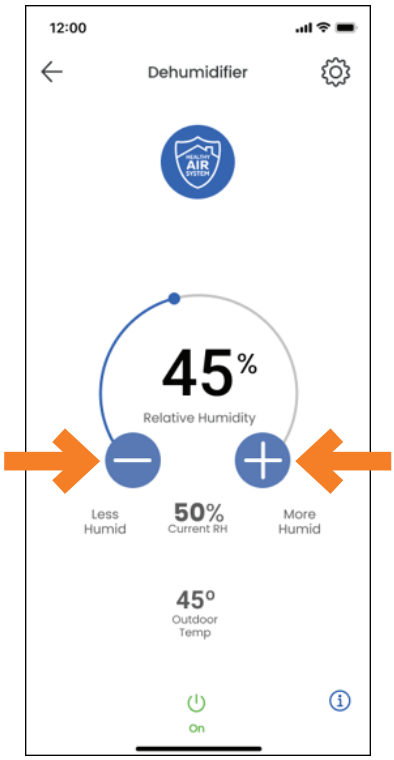

Maintenance

CLEANING THE FILTER

After initial installation, the air filter and drain should be checked and cleaned. The **Filter Reminder** installation parameter, under **Basic Setup**, will determine when the **Service Filter** reminder will display after the amount of hours of dehumidifier run time selected have elapsed.

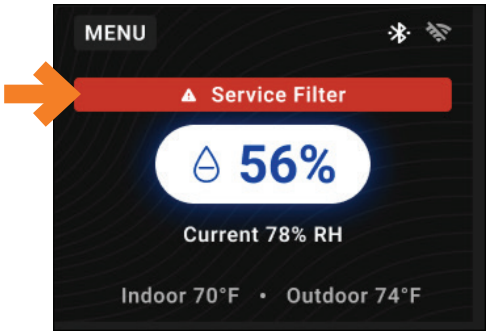

1. On the user interface **Main Menu**, turn the user interface off.
2. Loosen the retaining screws (E070W/E130W) or pop out (E080W/E100W) the filter access door (see **FIGURE 1**) from the drain side of the dehumidifier until it releases and then remove the filter door.
3. Lift and pull (E050W) or slide the filter out of the dehumidifier (E070W/E080W/E100W/E130W).
4. Rinse the filter with water to remove dust and collected particles from the filter.
5. Shake off excess water from the filter.
6. Clean the drain as described in **CLEANING THE DRAIN** on page 10.
7. Reinstall the filter. An arrow on the filter frame shows the direction of airflow and it should point into the dehumidifier.
8. Replace the filter access door and tighten the retaining screws (E070W).
9. On the user interface **Main Menu**, turn the user interface on.

The **Service Filter** reminder will display on the control when the filter life reaches 10% or less.

The filter life can be checked and reset on the user interface anytime. On the user interface **Main Menu** select **Filter Life**. To reset the filter life, select **Reset Filter Life**.

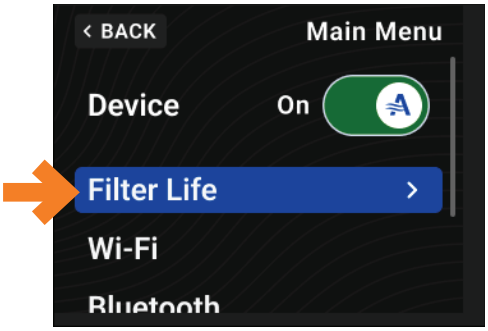

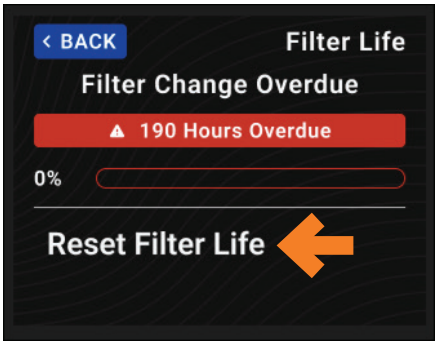

CLEANING THE DRAIN

1. With the filter door on the drain side of the dehumidifier removed, reach in and pull out the drain insert (E080W & E100W) using the finger loop (see **FIGURE 2**).

   NOTE: Drain insert must be installed before operating.

2. Clean the accessible portion of the drain pan and the drain insert using a mild detergent.

FIGURE 2: DRAIN CLEANING

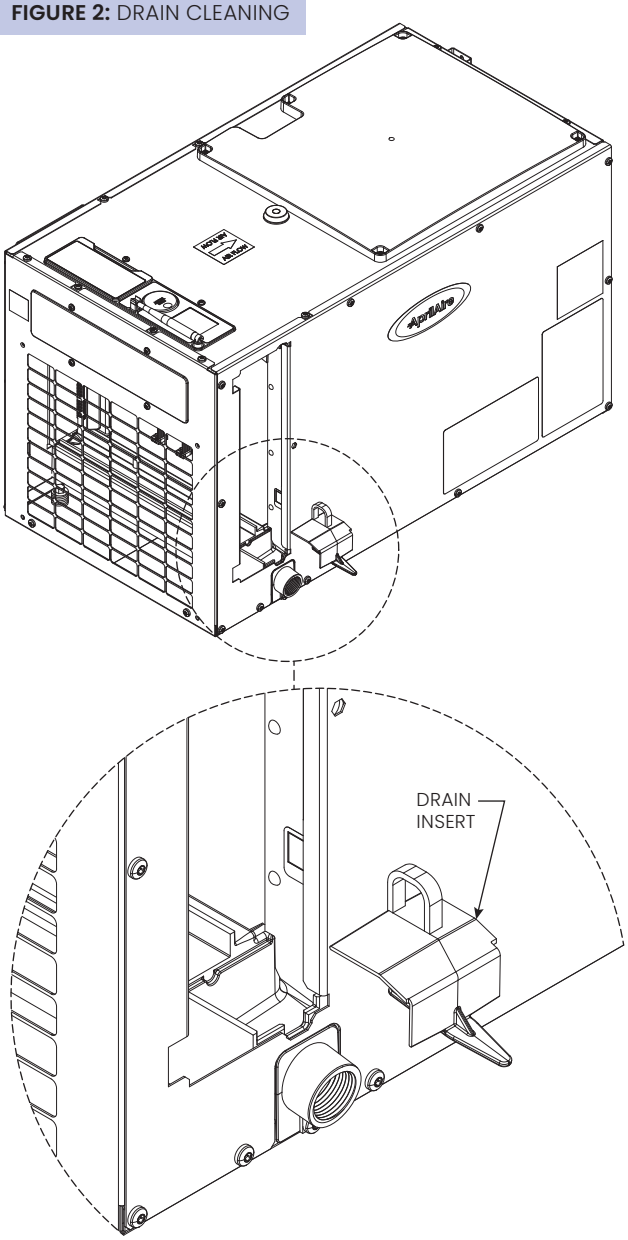

3. If the drain has a capped tee or elbow to allow cleaner to be poured directly in the drain, remove the cap and pour approximately one cup of white vinegar into the tube (see **FIGURE 3**). If there is no visible access to the drain line from outside of the dehumidifier, pour approximately one cup of vinegar into the drain pan of the dehumidifier where the drain insert was located.

FIGURE 3: CAPPED DRAIN ACCESS FOR CLEANING PROCESS

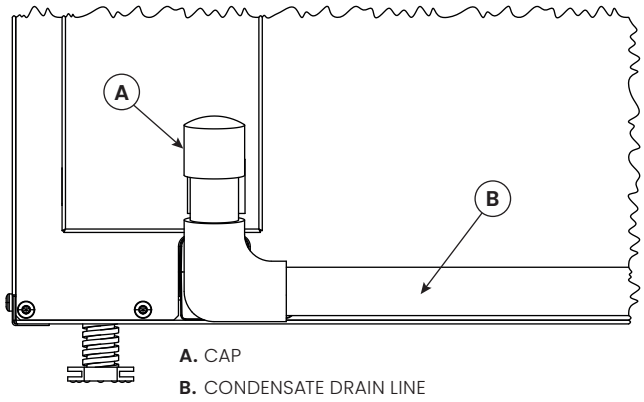

4. Reinstall the drain insert by gently placing the tip into the drain opening and rocking the insert downwards into place (see **FIGURE 2**). When inserted properly, the top of the drain insert will be at the same height as the filter guide channel.

   NOTE: The drain insert shown **FIGURE 2** only applies to E080W/E100W models.

5. If the dehumidifier has clear flexible drain tubing, look for excess buildup in the drain line that might prevent water flow, and replace as needed. Clear, smooth, flexible 3/4" Inside Diameter (ID) drain tubing is available in most hardware stores or Do-It-Yourself (DIY) retail stores.

NOTICE

Running the dehumidifier without the drain insert can lead to condensate leaks.

Preparing the Unit for Installation

NOTE: Not applicable for E050W.

REPOSITIONING THE USER INTERFACE FOR THE APPLICATION

Locate the onboard user interface (see **FIGURE 4**) on the top of the dehumidifier or at the front of the dehumidifier if the user interface cannot be seen/accessed in the top orientation. It may also be rotated 180 degrees in either orientation (see **FIGURE 5**).

FIGURE 4: USER INTERFACE LOCATION (MODEL E100W SHOWN)

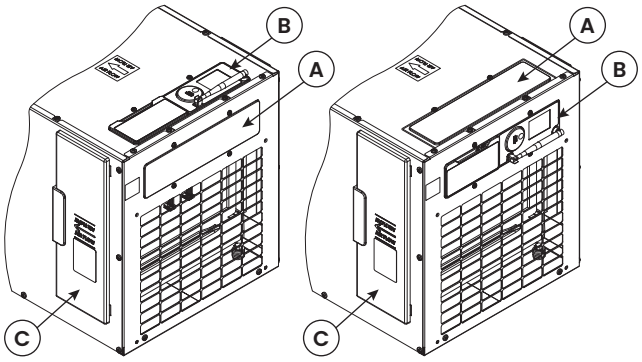

A. USER INTERFACE DOOR

B. USER INTERFACE

C. FILTER ACCESS DOOR

90-02806

FIGURE 5: USER INTERFACE ROTATED 180 DEGREES

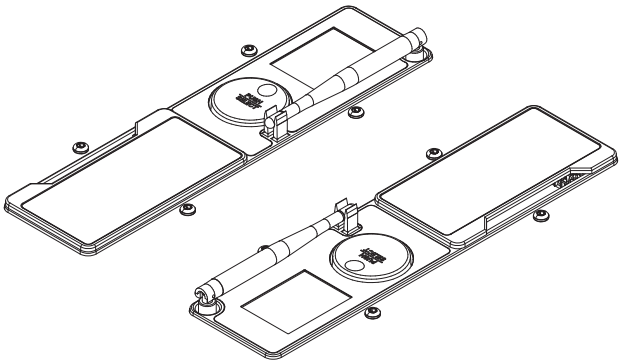

90-2525

MOVING THE CONTROL

1. Remove the front user interface door.
2. Remove the filter access door and filter.
3. Detach the onboard user interface by removing the four (4) screws around the user interface.

   NOTE: Use one hand to support the bottom of the onboard user interface when removing.
4. Keep the user interface in the unit and relocate to the front access hole.
5. Secure the user interface with the same four screws used to attach the user interface to the top of the unit.
6. Secure the user interface door to the top of the unit.

Wiring

No additional wiring is needed unless:

- the dehumidifier is ducted to the HVAC system
- a separate, external control such as a thermostat or dehumidistat is to be used
- a float switch, either integral to a condensate pump or mounted to the condensate pan, is used

Use 18-22 AWG wire for any needed wiring. Access the dehumidifier wiring terminals by pulling off the wiring access cover near the user interface display (see **FIGURE 6**). Snap the wiring access cover back into place after completing all wiring.

WIRING TO THE HVAC SYSTEM

When the dehumidifier is ducted to the HVAC system, it is recommended that it also be wired to the HVAC system as shown in **FIGURE 7**. If ducted to the HVAC system in a return-to-return configuration, the dehumidifier **must** be wired to the HVAC system to prevent short-circuiting dehumidified air directly back to the dehumidifier inlet. In a return-to-supply ducting configuration, running the HVAC fan with the dehumidifier ensures the warm dry air is mixed with room air before being discharged to the home.

OPTIONAL W & Y WIRING

- Wire the W and/or Y terminal to the HVAC system when using the ventilation feature of the dehumidifier. See **VENTILATION** on page 13.
- Wire the dehumidifier Y terminal to the HVAC system to disable the dehumidifier compressor from operating when the air conditioning is running. See **ENABLING DEH W/AC** on page 17 for additional setup steps required to access this feature.

WIRING TO EXTERNAL OR REMOTE CONTROL

The dehumidifier can be wired to an **external control** that senses the humidity in the living space, such as an AprilAire Thermostat or the Model 76 Dehumidifier Control. This is most often done when the **dehumidifier is ducted to the HVAC system** and is located in a hard-to-reach location such as an attic or basement.

The Model 76, when used as a **remote control**, allows the user to see the humidity sensed by the dehumidifier and adjust the dehumidifier setting from a remote location. This is most often used when the **dehumidifier is not ducted to the HVAC system** and serves a hard-to-reach location such as a crawl space or basement.

If using an **external control**, wire to the DH terminals of the dehumidifier (see **FIGURE 8**). Most external controls use a normally open switch that closes with a dehumidification demand. If using the AprilAire Model 76 as a **remote control**, wire to the (+ - A B) terminals. Refer to the installation instructions for the control being used for wiring details.

FIGURE 6: WIRING ACCESS COVER LOCATION (MODEL E100W SHOWN)

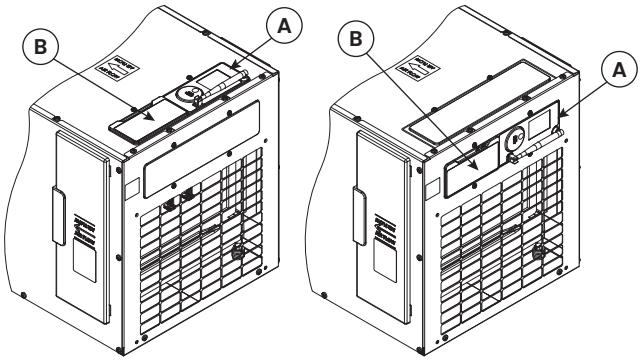

A. USER INTERFACE

B. WIRING ACCESS COVER

90-02806

FIGURE 7: WIRING TO HVAC SYSTEM

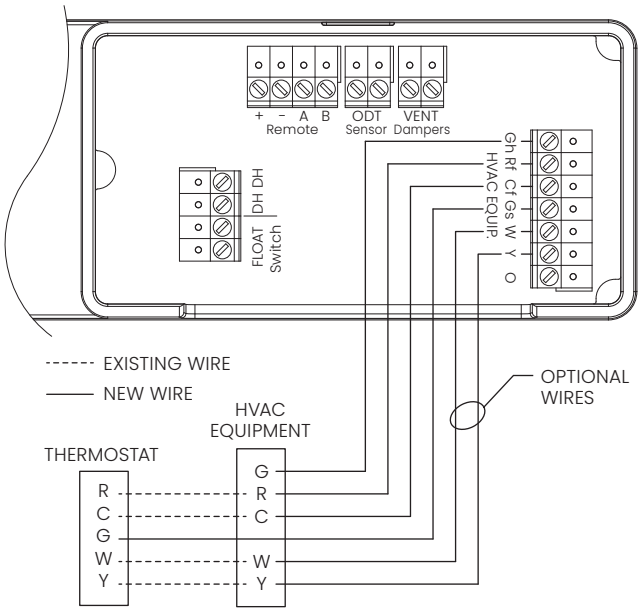

90-1859

FIGURE 8: WIRING TO AN EXTERNAL OR REMOTE CONTROL

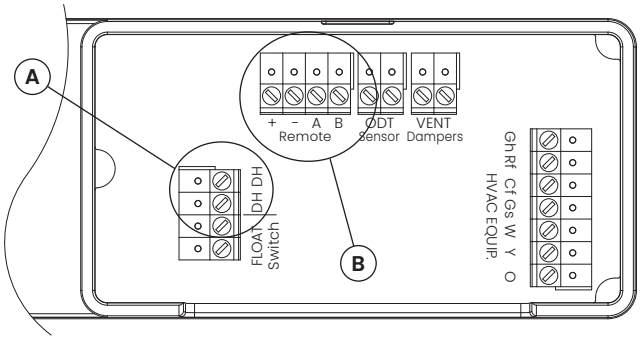

A. USE FOR EXTERNAL CONTROL APPLICATIONS

B. USE FOR REMOTE CONTROL APPLICATIONS

90-2694

WIRING TO A FLOAT SWITCH

Use only if the installation includes a float switch or a condensate pump. The dehumidifier leaves the factory with a jumper wire installed in the float switch terminals. Remove the jumper and wire the float switch terminals to the float switch or condensate pump overflow switch as shown in **FIGURE 9**.

FIGURE 9: FLOAT SWITCH WIRING

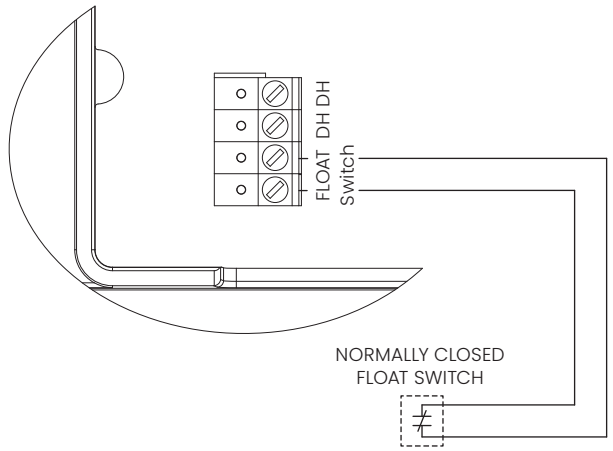

90-1857

Ventilation

The dehumidifier can activate a normally closed damper to bring in outdoor air through a fresh air intake duct. This feature cannot be used when a Model 76 has been installed in a remote control application.

1. Install the Fresh Air Inlet (FAI) duct and damper as shown in **FIGURE 10** and **FIGURE 11**.

FIGURE 10: ONBOARD CONTROL VENTILATION INSTALLATION

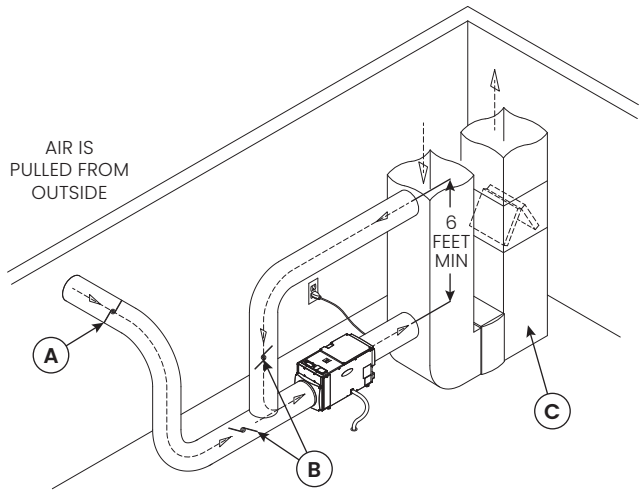

A. NORMALLY CLOSED VENT DAMPER
B. BALANCING DAMPERS
C. HVAC/FURNACE

90-1897

FIGURE 11: EXTERNAL CONTROL VENTILATION INSTALLATION

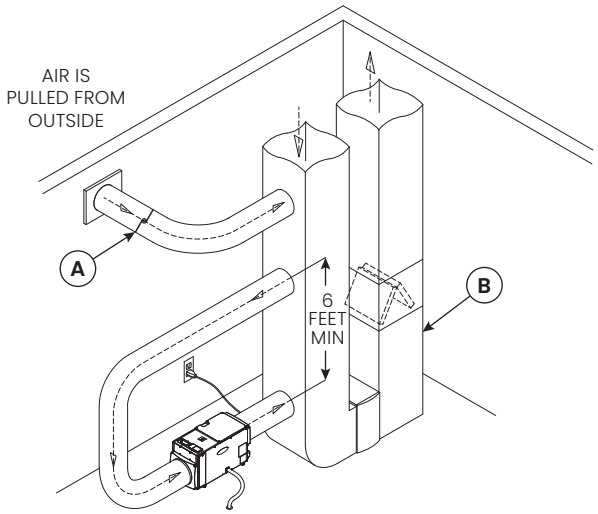

A. NORMALLY CLOSED VENT DAMPER
B. HVAC/FURNACE

90-1898

2. Set up an outdoor temperature source by installing an Outdoor Temperature Sensor (ODT) as shown in **FIGURE 12** and **FIGURE 13** or with Advanced Weather data – only needed if ventilation will be limited during high or low outdoor temperatures.

   NOTE: To set up Advanced Weather data, the device location (address) will need to be filled in on the AprilAire app account.

   NOTE: For ventilation to limit during high or low outdoor temperatures, the **Outdoor Temperature Source** will need to be set during the IAQ Set up. See page 16.

FIGURE 12: ODT MOUNTED OUTSIDE

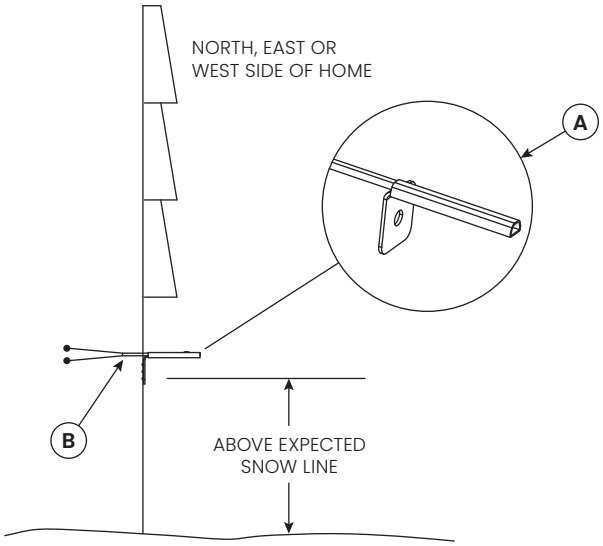

A. OUTDOOR TEMPERATURE SENSOR
B. OUTDOOR TEMPERATURE SENSOR LEADS

B2202617-D

FIGURE 13: ODT MOUNTED IN INTAKE DUCT

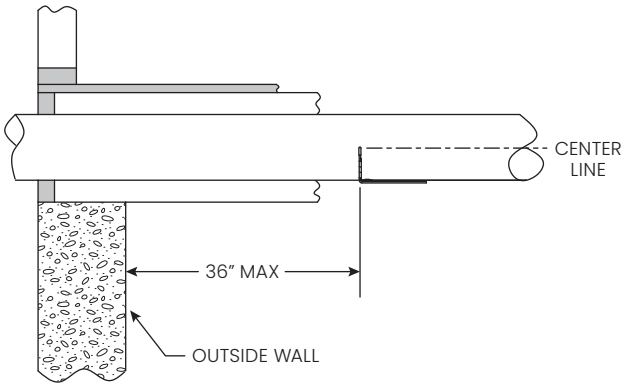

3. Wire the FAI damper, HVAC equipment and outdoor temperature sensor to the dehumidifier control as shown in **FIGURE 14**.

FIGURE 14: VENTILATION WIRING

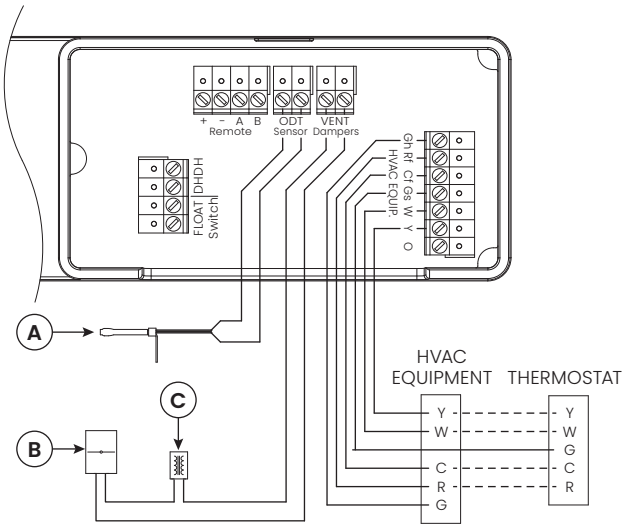

A. OPTIONAL OUTDOOR TEMPERATURE SENSOR (MODEL 8052)

B. 6" NORMALLY CLOSED DAMPER

C. 24 VAC (10 VA MIN) TRANSFORMER

90-1861

4. If using the dehumidifier for air cycling (see page 16 for details), use **IAQ Setup** to enable ventilation and setup the ventilation options.

Whenever the heating, cooling or dehumidifier is active, the ventilation damper will open and bring in outdoor air. If the equipment doesn't run for the set number of minutes, the dehumidifier will turn on the HVAC fan at the end of the hour to ensure ventilation needs are met.

SEQUENCE OF OPERATION

"CODE" SETTING

The control will turn on ventilation with a heating, cooling or fan call for the set number of minutes during a one-hour cycle period.

- If outdoor temperature is above the high temperature limit, ventilation will not occur with with cooling or fan calls.
- If outdoor temperature is below the low temperature limit, ventilation will occur with a heat call.
- If outdoor air temperature is between the high and low temperature limits and the HVAC equipment does not turn enough to meet ventilation time within the hour, the control will turn on ventilation without a heating, cooling or fan call.
- The control will also turn on the HVAC blower if wired to do so.

If the outdoor temperature exceeds the limits set at the end of the first hour, then no additional ventilation will occur for another 60 minutes, and the cycle period will automatically adjust to four hours.

- When the ventilator starts again, it will sample the air temperature and if in range, will meet the set amount of ventilation during the four-hour cycle period.
  - For example, if Vent Time were set to 25 minutes per hour and the temperature fell below the low limit, ventilation would only occur during a heating call.
  - If the heating only operated for 10 minutes during the hour, the control will automatically change the cycle period to four hours and work to provide the additional 90 total minutes of ventilation (25 min/hr * 4 hours = 100 minutes, minus the 10 minutes of ventilation that occurred during heating) during the four-hour cycle period.
- If the air temperature is still out of range, the control will automatically switch to an 8-hour cycle period, then a 12-hour cycle period, and finally a 24-hour cycle period. During 8, 12 and 24 hour cycle periods, the total ventilation time increases to compensate for ventilation effectiveness as defined in ASHRAE Standard 62.2-2010. When the cycle period automatically adjusts to 24-hours, the control will turn on ventilation to meet the requirements even if the temperature is outside of the set limits.

"COMFORT" SETTING

The control will turn on ventilation with a heating, cooling or fan call by the HVAC equipment, if the outdoor air temperature is within the high and low ventilation temperature limits and the indoor RH is within the high and low RH limits, for the set number of minutes during a one-hour cycle period. If the HVAC equipment does not turn on enough to meet the ventilation time within the hour, the control will turn on ventilation without a call, if the outdoor air temperature and indoor RH is within the set limits. The control will also turn on the HVAC system blower, if wired and set up to do so. If the outdoor temperature or indoor RH are outside of the set limits, then no ventilation will occur.

Installer Set-up

ENTERING INSTALLER SETTINGS MENU

1. Enter the **Main Menu** and select **Installer**.

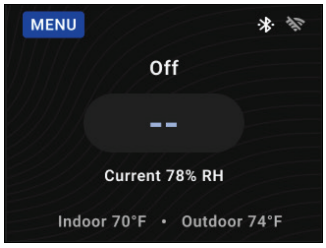

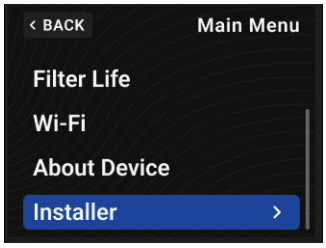

2. Enter the password **AIRE** into the **Installer Password** screen by turning the knob to navigate to the letters and pressing the knob to select the letter. Navigate to and select **SAVE** to proceed to the installer settings menu.

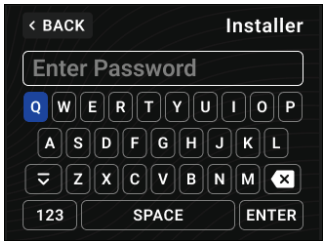

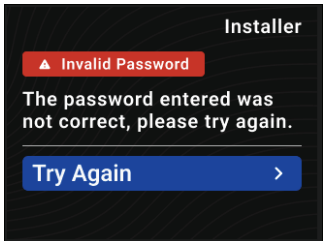

NOTE: If the password is entered incorrectly, the image above will show. Select **Try Again** to navigate back to the password entry.

NOTE: As many password attempts as needed can be entered.

INSTALLER WIZARD

Selecting **Basic Setup**, **Advanced Setup** or **IAQ Setup** starts an installation wizard (for that selection). Pushing the knob selecting a value will navigate a user to the next option in the wizard. Once the last option has been selected, that next knob selection will save the changes and navigate back to the **Installer** settings menu.

NOTE: Selecting BACK while in the middle of an installation wizard will navigate to the previous option. If on the first option in the setup wizard, when BACK is selected, the changes made will be discarded and the wizard will exit to the installer settings menu.

BASIC SET-UP

Installer Setting	Description	Options (default is **bold**)
System Control Source	This setting decides what will be controlling the dehumidification routine. **Internal** – Uses the on-board sensors and the dehumidifier controls the routine **Remote** – Uses the on-board sensors and is controlled by a Model 76 **External** – Doesn't use on-board sensors and uses DH/DH terminals to control the dehumidification on and off. Example of an external control would be a thermostat. **Wireless** - Uses Z10ODT wireless sensors and the dehumidifier controls the routine. **Wireless and Internal** - Uses both the on-board sensors and Z10ODT wireless sensors and the dehumidifier controls the routine. **NOTE:** The options for **Wireless** and **Wireless and Internal** will not be available if the **Outdoor Temperature Source** is set to **Wireless ODT**.	**Internal**, Remote, External, Wireless, Wireless and Internal
HVAC System Type	The heat system that is used that the dehumidifier will be installed into.	**Heat/Cool**, Heat Pump, None
Dehumidify with AC	Selects if a dehumidifier is disabled during a cooling call.	On, **Off**
Filter Reminder	The amount of dehumidifier fan usage (in hours) before the Service Filter Reminder will become active.	720 hours, 1,440 hours, 2,160 hours, **Off**

ADVANCED SET-UP

Installer Setting	Description	Options (default is **bold**)
Air Sampling	Amount of time that must elapse, following the dehumidifier fan output turning off, before Air Sampling occurs. Not applicable when external control is enabled.	15 to 60 minutes, **60 minutes** (15 minute increments)
RH Offset	Offset applied to relative humidity measured by the onboard RH sensor when set to internal control.	-5%RH to +5%RH, **0%RH**

IAQ SET-UP

Installer Setting	Description	Options (default is **bold**)
Outdoor Temperature Source	The outdoor temperature will display when set to **Wired** or **Advanced Weather**. The outdoor temperature value will be used for ventilation to monitor for temperature limits for bringing too hot or too cold of outside air. **NOTES:** • When set to **Advanced Weather** Wi-Fi should be set-up beforehand. • When System Control Source is set to **Wireless** or **Wireless and Internal** the **Wireless ODT** option will not be available.	Advanced Weather, Wired ODT, Wireless ODT, **None**
Vent (Enable/Disable)	Selects if ventilation is installed. (If set to Disable, no other ventilation settings will be available.)	Enable, **Disable**
High Outdoor Temperature Limit (Enable/Disable)	Selects if the High Temperature Limit is enabled, that would prevent ventilation when exceeded.	**Enable**, Disable
High Outdoor Temperature Limit	Sets the high temperature at which ventilation will be locked out.	85°F to 105°F, **100°F**
Low Outdoor Temperature Limit (Enable/Disable)	Selects if the Low Temperature Limit is enabled, that would prevent ventilation when exceeded.	**Enable**, Disable
Low Outdoor Temperature Limit	Sets the low temperature at which ventilation will be locked out.	-10°F to 40°F, **10°F**
Comfort/Code	Selects if ventilation is configured through the Code setup or Comfort. Code setting ensures missed lockout time is made up.	**Code**, Comfort
Vent Year Code	Selects what ASHRAE 62.2 code year should be used.	**2010**, 2013
Number of Bedrooms	Selects the number of bedrooms to be used for the Calculated Minutes per Hour.	1-10 bedrooms, **3 bedrooms**
Square Footage	Selects the size of the home to be used for the Calculated Minutes per Hour.	500 to 7,500 square feet, **2,500 square feet** (in 100-square-foot increments)
Measured CFM	Selects the measured ventilation CFM to be used for the Calculated Minutes per Hour.	30 CFM to 350 CFM, **110 CFM** (in 5 CFM increments)
Vent Time	Displays the Ventilation Time calculated. Can be modified from the calculated vent time.	6 to 60 minutes, **60 minutes**
HVAC Fan with Vent	Selects if ventilation forces the fan on.	**On**, Off
Outdoor Air Dehumidify	The dew point to dehumidify to while ventilation is running.	50°F to 64°F dew point, **58°F** (in 1°F increments)

SETTING UP REMOTE CONTROL AND EXTERNAL CONTROL

- If wiring to a Model 76 for remote control (see page 12 for details), under **Basic Setup**, modify **System Control Source** to select **Remote**.
- If wiring to an external control (see page 12 for details), under **Basic Setup**, modify **System Control Source** to select **External**.

Push the knob to make selection and navigate to the next option in **Basic Setup**.

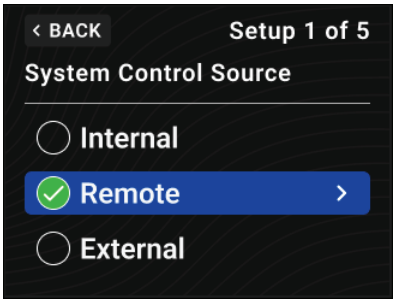

SETTING UP VENTILATION / AIR CYCLING

1. If using the dehumidifier for air cycling (see page 16 for details), use **IAQ Setup** to enable ventilation and setup the ventilation options.
2. The vent time will be calculated based upon the living space options: **Number of Bedrooms** and **Square Footage**. To adjust the vent time, with the knob, select the vent time to edit the vent time. Turn the knob clockwise or counterclockwise to modify and push the knob to update the value.

APPLYING AN RH OFFSET

An offset can be applied to the onboard humidity reading to avoid discrepancies with other humidity-measuring devices in the home. Turn the knob clockwise or counterclockwise to select an offset from -5% to 5%. Push the knob to navigate within the **Basic Setup**.

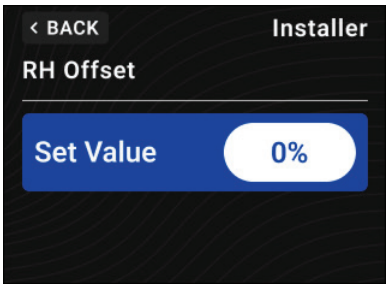

ENABLING DEH W/AC

To allow dehumidification during active air conditioning, under **Basic Setup**, select **On** with the knob.

To disable dehumidification when the air conditioning in on, under **Basic Setup**, unselect **On** with the knob. This option may be preferable when the air conditioning system has difficulty maintaining the desired set point.

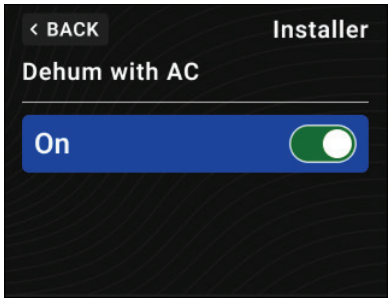

Connecting a Wireless Sensor

This option is used to pair a water detection sensor or a Z10ODT sensor for either remote humidity sensing **OR** as an outdoor temperature source.

1. Navigate to the **Wireless Sensors** menu. Push the knob to select **Add Sensor**.

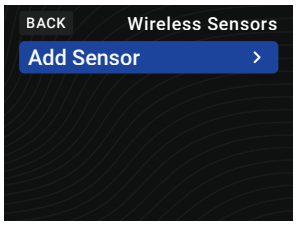

OR

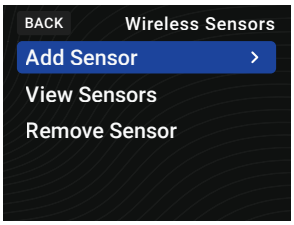

2. Put the sensor into pairing mode. Refer to the wireless sensor manual for specific instructions for how to put the sensor into pairing mode.
3. On the dehumidifier, select **NEXT** and wait for the pairing process to complete. When the sensor is detected and added to the system, select **Done**.

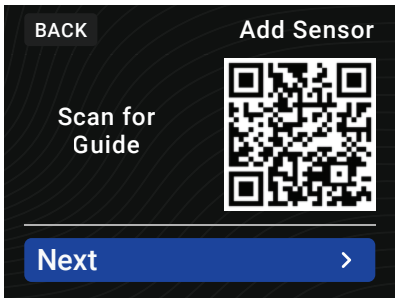

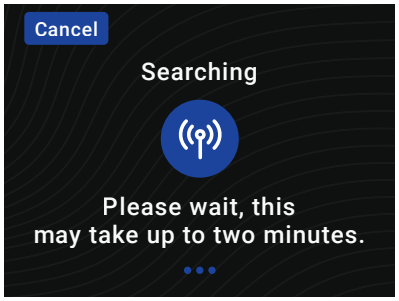

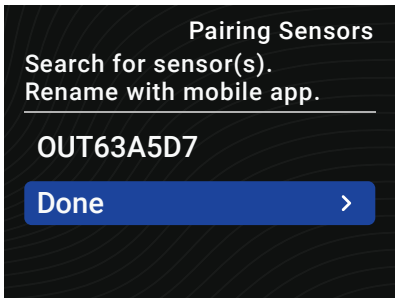

Installer Test Mode

If everything is properly wired, the dehumidifier and all of the wired components will turn on and off during Installer Test Mode to demonstrate that all are properly operating. Installer Test Mode lasts for 1.5 minutes. If **EXIT** is selected during the test mode, the dehumidifier will exit **Installer Test** and return to the **Installer** menu.

DEHUMIDIFICATION ONLY

If the dehumidifier is not already off, toggle the **Device Status** to **Off**.

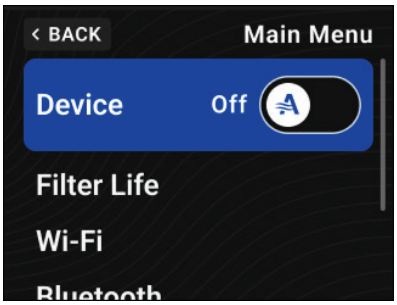

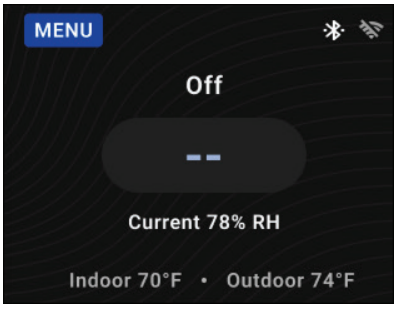

Enter Installer Test from the Installer menu. The display will show the On/Off status of Fan Ramp Up, Ventilation and the measured humidity value. If wired to the HVAC system, the HVAC blower will turn on.

After the fan has been allowed to ramp up for 25 seconds, the dehumidifier compressor will turn on and on/off status Dehumidifying will replace Fan Ramp Up on the control screen.

After one minute of compressor operation, all outputs will turn off and the **Installer Test Complete** page will display for 3 seconds and then return to the **Installer** menu.

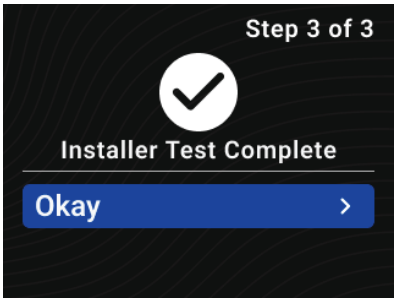

VENTILATION

If the dehumidifier has been set up for ventilation, **VENTILATING** will appear on the display throughout Installer Test Mode, and the ventilation damper will be energized.

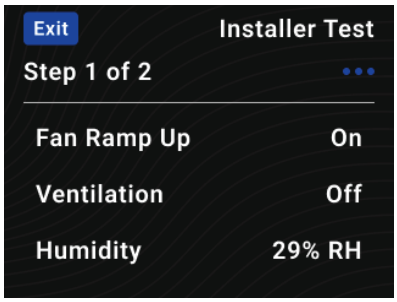

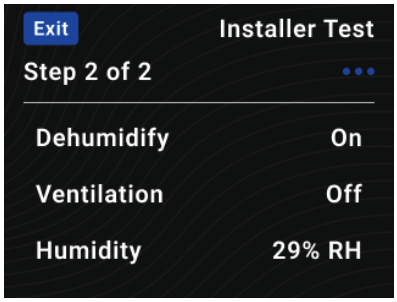

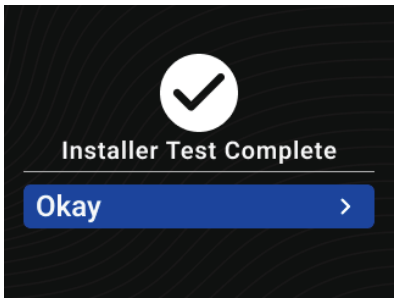

Starting Up the Unit and Sequence of Operation

Ensure unit is plugged in, and if equipped, use the ON/OFF power switch near the power cord to apply power to the dehumidifier.

USING THE DEHUMIDIFIER CONTROL ONLY

1. On the **Main Menu**, turn the **Device** toggle to **On**, to turn the dehumidifier control ON. The display will show the current humidity setting, and the dehumidifier blower and HVAC blower (if wired to the HVAC system) will turn on to start sampling (unless **Control Source** is set to **Wireless** or **External**).

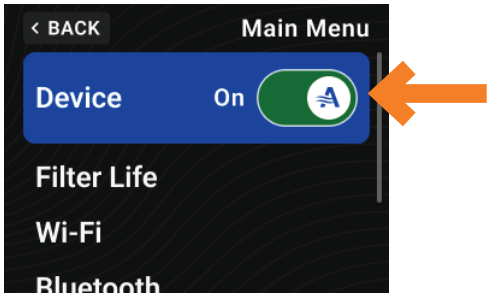

The measured humidity from the internal and/or wireless sensors appears below the humidity setting and if applicable Air Sampling appears on the display.

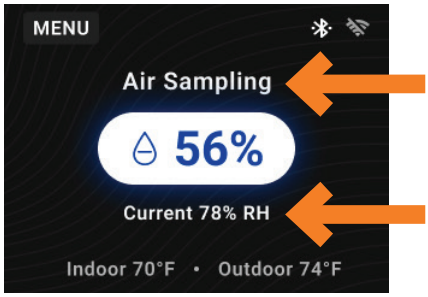

2. Use the knob to adjust the humidity setting as desired. The recommended initial setting is between **55%** and **59%** RH.

   a. Navigate to the current humidity setting and select with the knob, enter the **Set Point Adjustment Page**.

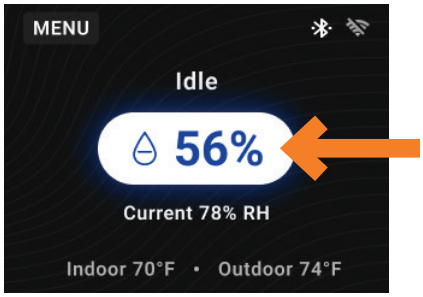

   b. Using the knob, turn it clockwise to increase the humidity setting or counterclockwise to decrease the humidity setting.

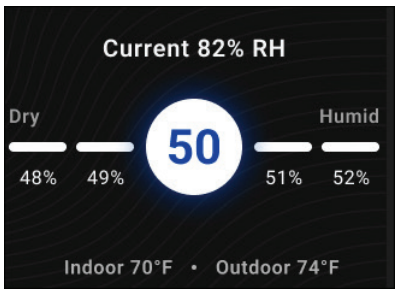

   c. To select the new humidity setting to dehumidify to, select with the knob. This will transition back to the **Home Page**.

3. The measured humidity will be compared to the setting. If internal sensors are used for control, 1 minute of air sampling will occur before the measurement is recorded.

   a. If the humidity is above the setting, the dehumidifier compressor turns on and and **DEHUMIDIFYING** will be displayed. The compressor remains on until the measured humidity falls 3% RH below the setting.

   b. If only internal sensors are used and the humidifty is below the setting at the end of air sampling, the blowers turn off and the current RH will no longer be displayed.

4. If internal sensors are used, the dehumidifier will air sample again once the programmed **Air Sampling** frequency has passed (e.g., **Air Sampling** programmed to 60 minutes, will sample every 60 minutes), or at any time if the humidity setting is lowered. If Z10ODT wireless sensors are used, they will continuously monitor humidity.

USING A MODEL 76 AS A REMOTE CONTROL

1. On the **Main Menu**, turn the **Device** toggle to **On**, to turn the dehumidifier control ON. The display will show the Model 76 status:
   - **Remote Off:** Indicates that a remote control is being used and the Model 76 is Off.
   - **Remote Control Source:** Indicates a remote control is being used and the Model 76 is On.

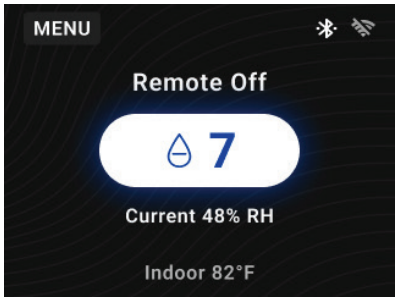

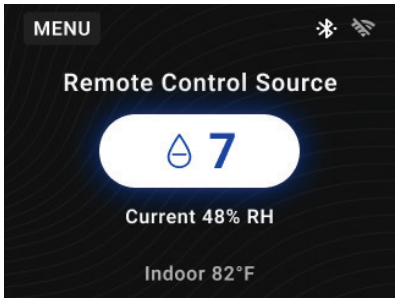

2. At the Model 76, press the ON button; the Model 76 will display the RH measured at the dehumidifier, and the dehumidifier blower will turn on to start sampling the air.
3. Use the ▲ or ▼ button on the Model 76 to adjust the dryness level as desired. The dryness levels range from **1** to **7**, with **1** being least dry and **7** being most dry; the recommended initial setting is **3**.
4. After 1 minute of sampling, the measured humidity will be compared to the setting:
   - **a.** If the humidity is above the setting, the dehumidifier compressor turns on and **ON** flashes on the Model 76 display.
   - **b.** If the measured humidity is below the setting, the dehumidifier blower turns off.
5. The dehumidifier will sample again once the programmed **Air Sampling** frequency has passed (e.g., **Air Sampling** programmed to 60 minutes, will sample every 60 minutes), or at any time if the dryness level is increased, at the Model 76.

USING AN EXTERNAL CONTROL

1. On the **Main Menu**, turn the **Device** toggle to **On**, to turn the dehumidifier control ON. The display will show **External Control Source** to indicate that an external control is to be used to control the dehumidifier.
2. At the external control, initiate a dehumidification demand. Refer to the literature provided with the external control. The dehumidifier fan and compressor, and the HVAC fan (if wired to do so) will turn on.

   NOTE: When using an external control, there is a three-minute delay after power-up (e.g., ON/OFF power switch is turned ON with unit plugged in) before the dehumidifier will respond to an external control. This prevents unanticipated, early start-up after power is applied.
3. Discontinue the demand at the external control; the dehumidifier and HVAC fan will turn off.

Service Instructions

SYMBOLS

Symbol ISO 7010-W021 (2011-05)	Symbol ISO 7000-1659 (2004-01)	Symbol ISO 7000-1659 (2004-01)
Warning: flammable materials	Service indicator: read technical manual	Operator's manual: operating instructions

SAFETY INSTRUCTIONS

⚠ WARNING

- **Sealed Refrigeration System is not field serviceable!**
- This appliance contains a mildly flammable A2L refrigerant.
- Do not use means to accelerate the defrosting process or to clean, other than those recommended by the manufacturer.
- The appliance shall be stored (when not in use) in a room without continuously operating ignition sources (for example: open flames, an operating gas appliance or operating electric heater).
- Do not pierce or burn sealed system.
- Be aware that refrigerants may not contain odor.

⚠ CAUTION

When connected via air ducts to one or more rooms the appliance shall be directly ducted to the space. Open areas such as false ceilings shall not be used as a return air duct.

SERVICE

Approved auxiliary devices: Only approved auxiliary devices approved by the appliance manufacturer shall be installed in the ductwork.

- Fresh Air Ventilator, Stock # 8190FF

The following checks shall be applied to installations using FLAMMABLE REFRIGERANTS:

- The ventilation machinery and outlets are operating adequately and are not obstructed.
- Marking on the equipment shall be visible and legible. Markings and signs that are illegible shall be corrected.
- When opening the ventilated enclosure for repair of electrical components, be sure to check for refrigerant leaks with a certified flammable refrigerant leak detector.

Repair Initial safety checks shall include:

- Servicing the electrical system on the unit should be carried out by a qualified and licensed electrician.
- Disconnect power from the unit (unplug) before attempting service or repair.
- The capacitors are discharged: this shall be done in a safe manner to avoid possibility of sparking; that no live electrical components and wiring are exposed in case of a leak.
- There is continuity of earth bonding.
- Sealed electrical components shall be replaced, not repaired.
- Do not apply any permanent inductive or capacitance loads to the circuit without ensuring that this will not exceed the permissible voltage and current permitted for the equipment in use.
- Intrinsically safe components must be replaced if tripped.
- Replace components only with parts specified by the manufacturer. Other parts may result in the ignition of refrigerant in the atmosphere from a leak.
- Prior to beginning work on systems containing FLAMMABLE REFRIGERANTS, safety checks are necessary to ensure that the risk of ignition is minimized.
- Ensure that the area is in the open or that it is adequately ventilated before removal of the dehumidifier panels for servicing or conducting any hot work in the vicinity of the unit. A degree of ventilation shall continue during the period that the work is carried out. The ventilation should safely disperse any released refrigerant and preferably expel it externally into the atmosphere.
- The refrigeration system is considered factory sealed and puncturing the refrigerant tubing in any way is prohibited.
- Repairing the refrigeration system shall not be performed in the field and must be done at the manufacturing facility by trained personnel.
- Check that cabling will not be subject to wear, corrosion, excessive pressure, vibration, sharp edges, or any other adverse environmental effects. The check shall also consider the effects of aging or continual vibration from sources such as compressors or fans.
- If a leak is suspected, all naked flames shall be removed/extinguished.

The following leak detection methods are deemed acceptable for all refrigerant systems:

- Under no circumstances shall potential sources of ignition be used in the searching for or detection of refrigerant leaks. A halide torch (or any other detector using a naked flame) shall not be used.
- Electronic leak detectors may be used to detect refrigerant leaks but must be calibrated correctly for Flammable Refrigerants. (Detection equipment shall be calibrated in a refrigerant-free area.)
- Ensure that the detector is not a potential source of ignition and is suitable for the refrigerant used.
- Leak detection equipment shall be set at a percentage of the Lower Flammability Limit (LFL) of the refrigerant and shall be calibrated to the refrigerant employed, and the appropriate percentage of gas (25 % maximum) is confirmed.
- Leak detection fluids are also suitable for use with most refrigerants but the use of detergents containing chlorine shall be avoided as the chlorine may react with the refrigerant and corrode the copper pipework. Examples of leak detection fluids are:
  - bubble method,
  - fluorescent method agents.
- **NOTE:** The use of silicon sealant can inhibit the effectiveness of some types of leak detection equipment.

FOR ADDITIONAL ASSISTANCE:
Technical Support is available Monday through Friday (see TROUBLESHOOTING).

Troubleshooting

NOTICE

Troubleshooting and repairs shall be performed by a qualified HVAC service technician, and all safety procedures shall be followed.

Technical support is available Monday through Friday 7:00 a.m. to 5:00 p.m. CST at 800.334.6011. Use the guides on the following pages to identify and correct system faults. Contact Technical Support before replacing the unit or any components and for additional troubleshooting.

DIAGNOSTIC CODES

When diagnostic codes **D0-D7** occur, the **Diagnostic Code Page** will display on the user interface. When diagnostic codes **D8-D11** and **D15-D19, D21** occur, the **Background Code** is active on the **Home Page** and will show below the humidity setting.

The **Diagnostic Code Details Page** shows the details and options to correct or dismiss (if applicable) a diagnostic code that is active and has been selected. The **Diagnostic Code Details Page** is shown on the user interface by:

- On the **Diagnostic Code Page**, the diagnostic code listed is selected
- On the **Home Page**, **Background Code** is selected.

D0-D7

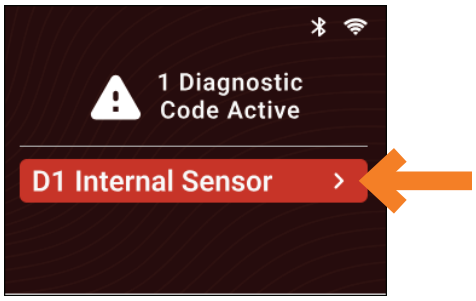

D8-11 and D15-D19

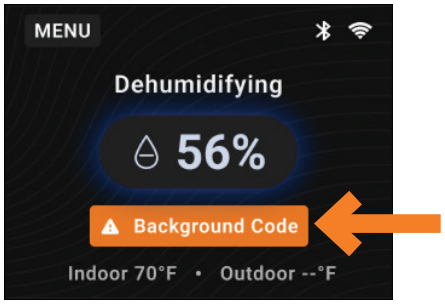

TABLE 2: DIAGNOSTIC CODES			
Diagnostic Code	**Description**	**Failure Details**	**Reset**
D0	Three Wire Interface Communication Fault	**Communication failure between display control and internal board.** **1.** Check the wiring on the back of the control to the internal board. **2.** If failure persists, replace the user interface (#70000238). **3.** If failure persists, replace the internal control board (#5444). **4.** If failure persists, call Technical Support.	Cycle Power
D1	Internal Sensor Failure	**Loss of communication with the internal %RH/temperature sensor.** **1.** Cycle power to clear error code. Unplug the unit from the outlet or switch the ON/OFF power switch (if equipped) to the OFF position for at least 10 seconds before restoring power. **2.** If error code reoccurs, replace User Interface, Part #70000238.	Cycle Power
D2	High Refrigeration Pressure	**The discharge line sensor measures higher than 190°F during compression operation.** **1.** Verify that the fan works and there is no blocked or restricted ductwork. **2.** Check and clean the filter. **3.** If the fault persists, call Technical Support.	Cycle Power
D3	Model 76 Remote Interface	**Communication loss between dehumidifier and remote.** **1.** Check connections between Model 76 and dehumidifier user interface. Remote **A** and **B** terminals should be fully inserted and secured in the user interface and Model 76 control terminals. **2.** If connections are correct and secure, turn off the dehumidifier and remove the Model 76. Use a short section of 4-wire cable to reconnect the Model 76 to the user interface. Turn the dehumidifier back on and increase the dryness level setting on the Model 76. If the dehumidifier turns on, a problem exists with the wiring between the dehumidifier and control. **3.** If the dehumidifier does not turn on, call Technical Support.	Self-Correcting
D4	Insufficient Capacity	**The suction line sensor hasn't measured at least a 3°F temperature drop in 20 minutes.** **1.** Document the Error code with a photo of the controls. **2.** Assure the dehumidifier has been in the test environment for 1 hour. **3.** Reset the fault by cycling power to the dehumidifier. **4.** Turn the humidity setting down (below room/home humidity level) to make a dehumidification call. **5.** Enter diagnostic test mode by simultaneously pressing the ▲ and MODE button for 3 seconds. The LCD will display: • the temperature measured by the internal sensor while also displaying **AIR SAMPLING** and **ON**. • the humidity measured by the internal sensor while also displaying **%RH** and **ON**. • the frost sensor temperature while also displaying **ON**. • Scroll through these values by using the ▲ or ▼ button. • Record these values withing the first 3 minutes of operation before the compressor starts. **6.** Allow the fan and compressor to run for approximately 15 minutes and then enter diagnostic test mode again as described above. Record values and call Technical Support.	Cycle Power
D5	Discharge Line Sensor Failure (High Temperature Thermistor)	**Discharge line sensor is open or shorted.** **1.** Check the high temperature sensor connection (if equipped) at the power board. The terminal should be fully seated on the power board pins. **2.** Remove the side access panel and verify the sensor is not damaged and connected to the refrigeration line coming from the compressor. **3.** If the sensor is connected and secured to the refrigeration line, it may need to be replaced with Part #5456 – contact Technical Support to confirm.	Cycle Power
D6	Suction Line Sensor Failure (Low Temperature Thermistor)	**Suction line sensor is open or shorted.** **1.** Check the low temperature sensor connection at the power board. **2.** Remove the side access panel and verify the sensor is not damaged and connected to the suction line. **3.** If the sensor is connected and secured to the refrigeration line, it may need to be replaced with Part #5455 – contact Technical Support to confirm.	Cycle Power

TABLE 2: DIAGNOSTIC CODES

Diagnostic Code	Description	Failure Details	Reset
D7	Float Switch Open	**Open circuit between float switch inputs.** **1.** Empty the condensate pan. **2.** Check the float switch connection at the user interface. **3.** If not using a float switch, verify jumper is between float switch terminals on dehumidifier user interface. **4.** If the problem persists, replace the float switch.	Self-Correcting
D8	Inlet Air Temperature	**The inlet air temperature is outside of 50°F - 104°F range for compressor operation.** **1.** Verify all ductwork is properly sealed. **2.** Check for air leakage that might affect the temperature or RH of the incoming air. **3.** If the air temperature is in range and the dew point is above 40°F, contact Technical Support.	Self-Correcting
D9	Wired Outdoor Temperature Sensor Failure	**Outdoor temperature sensor is shorted or open.** **1.** Check the sensor connection at the power board. **2.** Remove the wires from the terminals and measure the resistance. A short circuit will have a resistance very close to 0 Ohms and an open circuit will have a very high resistance. Use the Ohms chart at right to approximate the resistance based on outdoor temperature. **3.** If the sensor is not reading correctly, replace the sensor, Part #8052. **Outdoor Temperature / Resistance** 0°F: 84,500 Ohms 20°F: 46,000 Ohms 40°F: 26,000 Ohms 60°F: 15,500 Ohms 80°F: 9,500 Ohms 100°F: 6,000 Ohms	Self-Correcting
D10	Wireless Outdoor Temperature Sensor Failure	**The wireless outdoor temperature sensor has not updated for 24 hours.** **1.** Replace sensor batteries. **2.** Repeat the sensor pairing. Refer to the **CONNECTING A WIRELESS SENSOR** section of this manual.	Self-Correcting
D11	Advanced Weather Connection Fault	**No local outdoor temperature available for the last 24 plus hours.** **1.** Check Wi-Fi connection on the AprilAire app and/or the dehumidifier user interface. **2.** Verify the device address is valid in the AprilAire app by the following steps. **a.** Select the location of the device. **b.** Select the Menu icon. **c.** Select **Edit Location** and verify address. 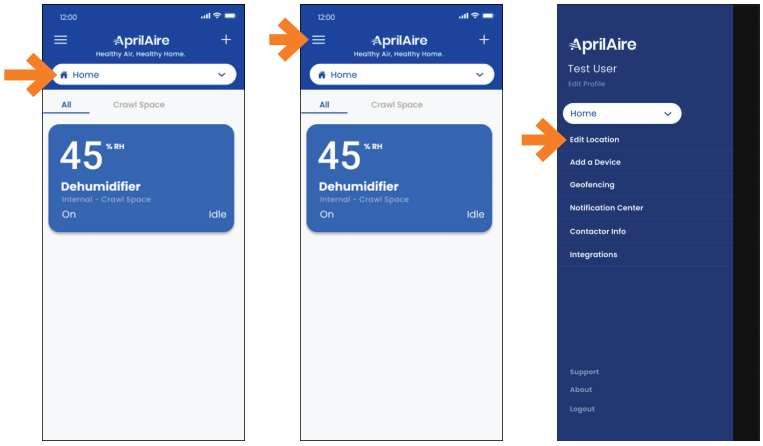	Self-Correcting

TABLE 2: DIAGNOSTIC CODES			
Diagnostic Code	**Description**	**Failure Details**	**Reset**
D15	Water Detection Alert	**The wireless water sensor detects water.** **1.** Check for water.	Self-Correcting
D16	Wireless Sensor Disconnected	**The wireless sensor has not updated for 60 minutes.** **1.** Replace sensor batteries. **2.** Repeat the sensor pairing. Refer to the **CONNECTING A WIRELESS SENSOR** section of this manual.	Self-Correcting
D17	Wireless Sensor Low Battery	**A wireless sensor has a low battery.** **1.** Replace the battery for the wireless sensor indicated in the alert.	Self-Correcting
D18	Outdoor Sensor Configuration Error	**Dehumidifier configuration was set to use a wireless outdoor temperature sensor and no wireless outdoor temperature sensor is paired.** **1.** Pair a wireless outdoor temperature sensor **OR** change the **Outdoor Temperature Source** in the IAQ Set-up Menu to **Advanced Weather**, **None** or **Wired ODT** (requires a wired outdoor temperature sensor).	Self-Correcting
D19	Sensor Radio Failure	**A failure was detected on the dehumidifier wireless sensor radio.** **1.** Cycle power to clear error code. Unplug the unit from the outlet or switch the ON/OFF power switch (if equipped) to the OFF position for at least 10 seconds before restoring power. **2.** If error code reoccurs, replace User Interface, Part #70000238.	Cycle Power
D21	Controlling Wireless Sensor Configuration Fault	**Dehumidifier configuration for System Control Source was set to "Wireless" or "Wireless and Internal" and no wireless sensor is paired.** **1.** Pair a Z10ODT wireless sensor **OR** change the System Control Source in the Basic Set-up menu.	Self-Correcting

TABLE 3: TROUBLESHOOTING GUIDE

Symptom	Failure Mode	Action
Dehumidifier does not turn on/run.	No power to unit.	• Check that the dehumidifier is plugged in. • Check that the power switch is turned ON (if equipped). • Check that the user interface is turned ON. • Check that the circuit breaker has not tripped.
Dehumidifier blower is running but with little or no airflow.	Pressure drop across dehumidifier is higher than 0.4" w.c. for Model E080 or 0.6" w.c. for Model E100/E100H.	• Check dehumidifier air filter and wash or replace. • Check for blocked ductwork and clear. • Verify that the outlet collar with backflow damper is installed on the outlet side of the dehumidifier. • Check if backflow damper is blocked or stuck and remove obstruction.
Dehumidifier blower is running but compressor is not.	Float Switch open (**D7** appears on display).	• If float switch is installed, check connections at user interface and empty the condensate pan. • If no float switch is installed, check that the jumper is installed at the float switch terminals on the user interface.
	Unit is defrosting.	• Frosting occurs when the incoming air is cool and dry, normally during Spring or Fall, or the airflow is restricted. Frosting due to cold/dry conditions is a normal part of operation and **DEFROSTING** will show on the display. If it is not cool and dry, look for blocked ductwork or a dirty filter.
	Inlet air temperature is outside of the 50°F–104°F range or the dew point is below 40°F and there is a demand for dehumidification.	• Verify all ductwork is properly sealed. Dehumidification will restart by itself when the incoming air temperature is within range and the dew point is above 40°F. **E8** appears on the display when inlet air conditions prevent operation.
The ventilation damper does not open when the HVAC fan is active.	Cycle time has been met.	• The damper will not open if the ventilation time has already been met.
	Incorrect transformer wiring.	• Verify wiring between damper, VENT terminal, and 24 VAC transformer. These should be wired in series. • Verify that 24 VAC transformer is 10 VA minimum and voltage is present.
	ODT error or outdoor air outside of ODT range.	• Check that the ODT is wired correctly to the dehumidifier user interface and connections are secure. • Check that the ODT is installed in the outdoor air intake according to the setup specified in **VENTILATION** on page 13. • Remove the ODT leads from the dehumidifier user interface and check the resistance. Compare the reading with the chart on the right. **Outdoor Temperature** / **Resistance** 0°F / 84,500 Ohms 20°F / 46,000 Ohms 40°F / 26,000 Ohms 60°F / 15,500 Ohms 80°F / 9,500 Ohms 100°F / 6,000 Ohms
Dehumidifier is not draining properly.	Drain line blocked or unit not level.	• Verify that the unit is level. • Check the drain line blockages and check for a continuous downward slope. • For E080W or E100W models, verify presence and condition of drain cover insert. See **MAINTENANCE** on page 10 for cleaning procedure, or replace with Part #5885 if missing or damaged.
The HVAC fan turns on unexpectedly.	Dehumidifier is sampling or ventilation in progress.	• The dehumidifier will turn on the HVAC fan during air sampling or as needed to meet the ventilation time.
Dehumidifier is producing hot air.	Normal function.	• Air is reheated across the condenser coil, resulting in a temperature rise between inlet and outlet.

Wi-Fi Maintenance and Troubleshooting

CLEARING ROUTER SETTINGS

If you purchase a new Wi-Fi router or change the security settings on your existing router, the router settings in the Wi-Fi dehumidifier need to be cleared so the new Wi-Fi router settings can be entered. To do this, enter the **Wi-Fi** menu (Menu > Wi-Fi). Then select **Disconnect**. This will remove all the previous Wi-Fi connection settings. Refer to the **Wi-Fi Quick Start Guide** for instructions on connecting the Wi-Fi dehumidifier to your Wi-Fi network. **NOTE:** Clearing the router settings will not remove the Wi-Fi dehumidifier from your user account. See **Removing the Wi-Fi Dehumidifier from a User Account** below.

REMOVING THE WI-FI DEHUMIDIFIER FROM A USER ACCOUNT

The Wi-Fi dehumidifier can only be registered to one account. If you need to remove the Wi-Fi dehumidifier from an existing account so it can be registered to a new account, it can be done at the Wi-Fi dehumidifier. This may need to be done for instance if you have purchased a home with the Wi-Fi dehumidifier and need to remove the Wi-Fi dehumidifier from the previous owner's account and register it to your account. To do this, enter the **Wi-Fi** menu (Menu > Wi-Fi). Then select **Unregister**. This will remove the Wi-Fi dehumidifier from any account that it is currently registered to. Refer to the **Wi-Fi Quick Start Guide** for instructions on registering the Wi-Fi dehumidifier to a new account.

TROUBLESHOOTING WI-FI CONNECTION

The Wi-Fi connection status is communicated through the use of the radio strength indicator on the **Wi-Fi** menu (Menu > Wi-Fi > Wi-Fi Details) and on the **Home Page**.

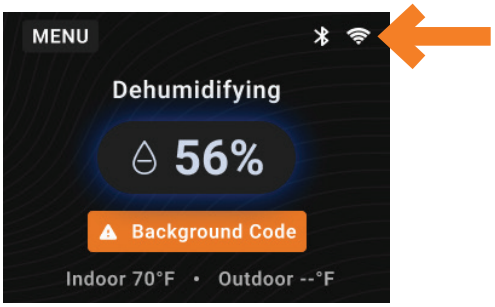

E050W Service Parts

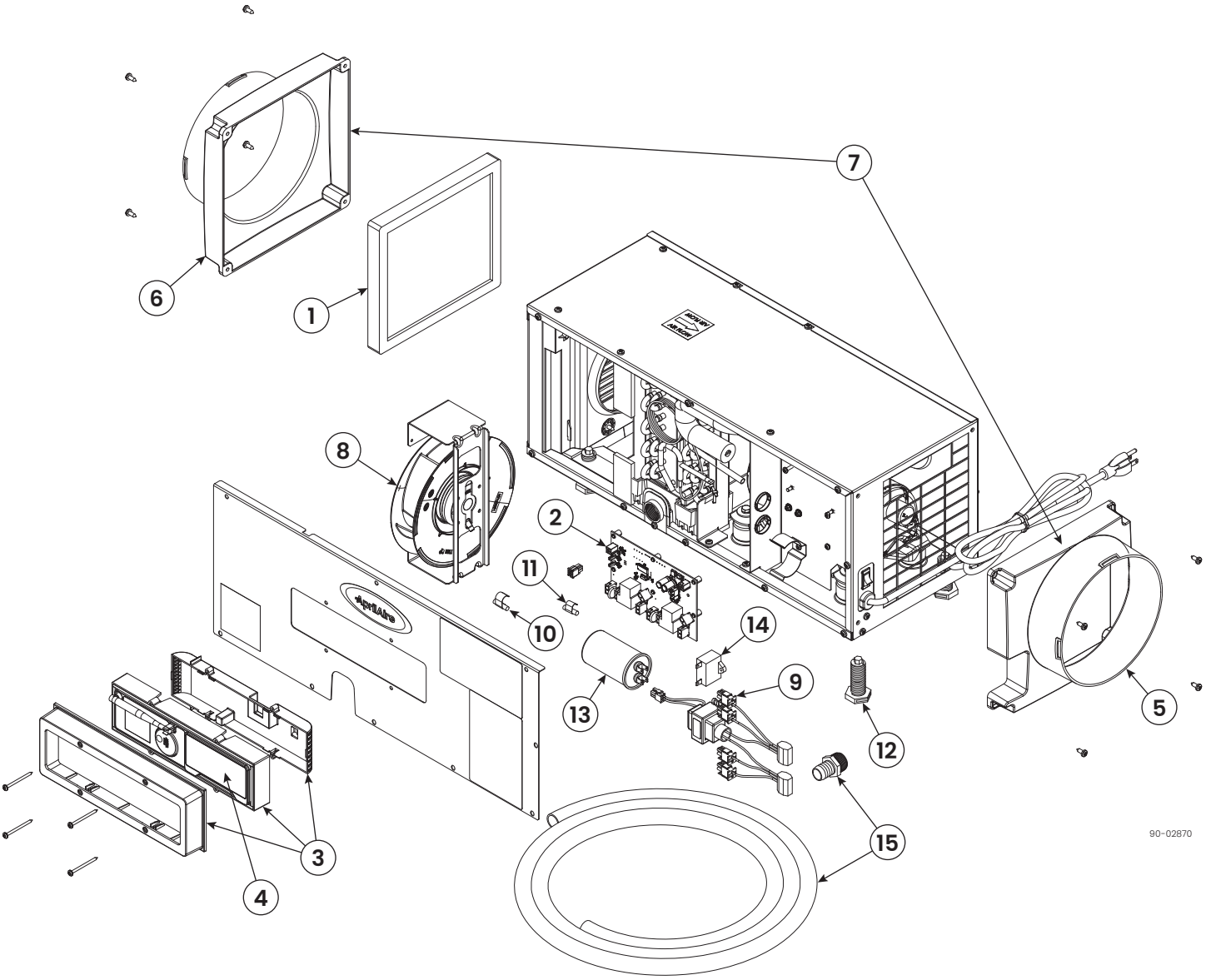

No.	Part Description	Part No.
1	Filter, 8.5" x 9.25" x 1" EZK	70000038
2	Internal Control Board	5444
3	User Interface Assembly	70000250
4	Wiring Access Door	5446
5	Outlet Duct Panel (optional)	70000040
6	Inlet Duct Panel (optional)	70000041
7	Inlet/Outlet Duct Panels (optional)	70000047
8	Fan with 7 MFD Capacitor	70000233
9	Wire Harness, Power	5884

No.	Part Description	Part No.
10	Sensor, Low Temperature	5455
11	Sensor, High Temperature (if equipped)	5456
12	Leveling Foot	5457
13	Capacitor, 35 MFD, 370 VAC	70000234
14	Capacitor, 7 MFD, 250 VAC	70000235
15	Drain Tube + Threaded Barbed Fitting	5692
	Threaded Barbed Drain Fitting	5693
NOT SHOWN		
Condensate Pump with Tubing		4856

E070W Service Parts

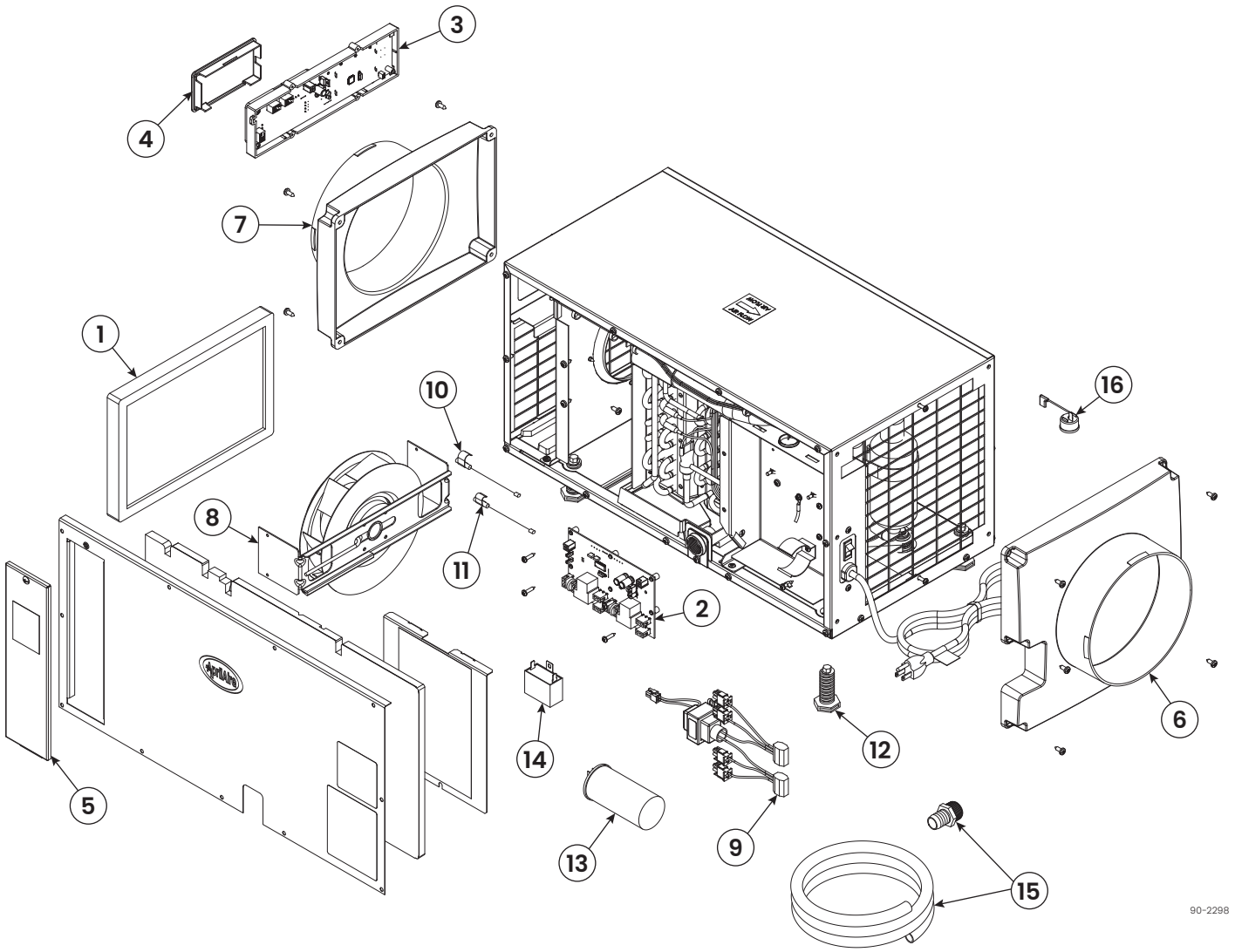

No.	Part Description	Part No.
1	Filter, 8” x 11.75” x 1” EZK	5695
2	Internal Control Board	5444
3	User Interface Assembly	70000238
4	Wiring Access Door	5446
5	Door, Filter Access	5696
6	Outlet Duct Panel	5698
7	Inlet Duct Panel	5699
8	Fan with 6MFD Capacitor	5694
9	Wire Harness, Power	5884
10	Sensor, Low Temperature	5455

No.	Part Description	Part No.
11	Sensor, High Temperature (if equipped)	5456
12	Leveling Foot	5457
13	Capacitor, 45MFD, 370 VAC	5458
14	Capacitor, 6MFD, 250 VAC	5582
15	Drain Tube + Threaded Barbed Fitting	5692
	Threaded Barbed Drain Fitting	5693
16	Compressor Overload Switch	5697
NOT SHOWN		
Condensate Pump with Tubing		4856

E080W/E100W Service Parts

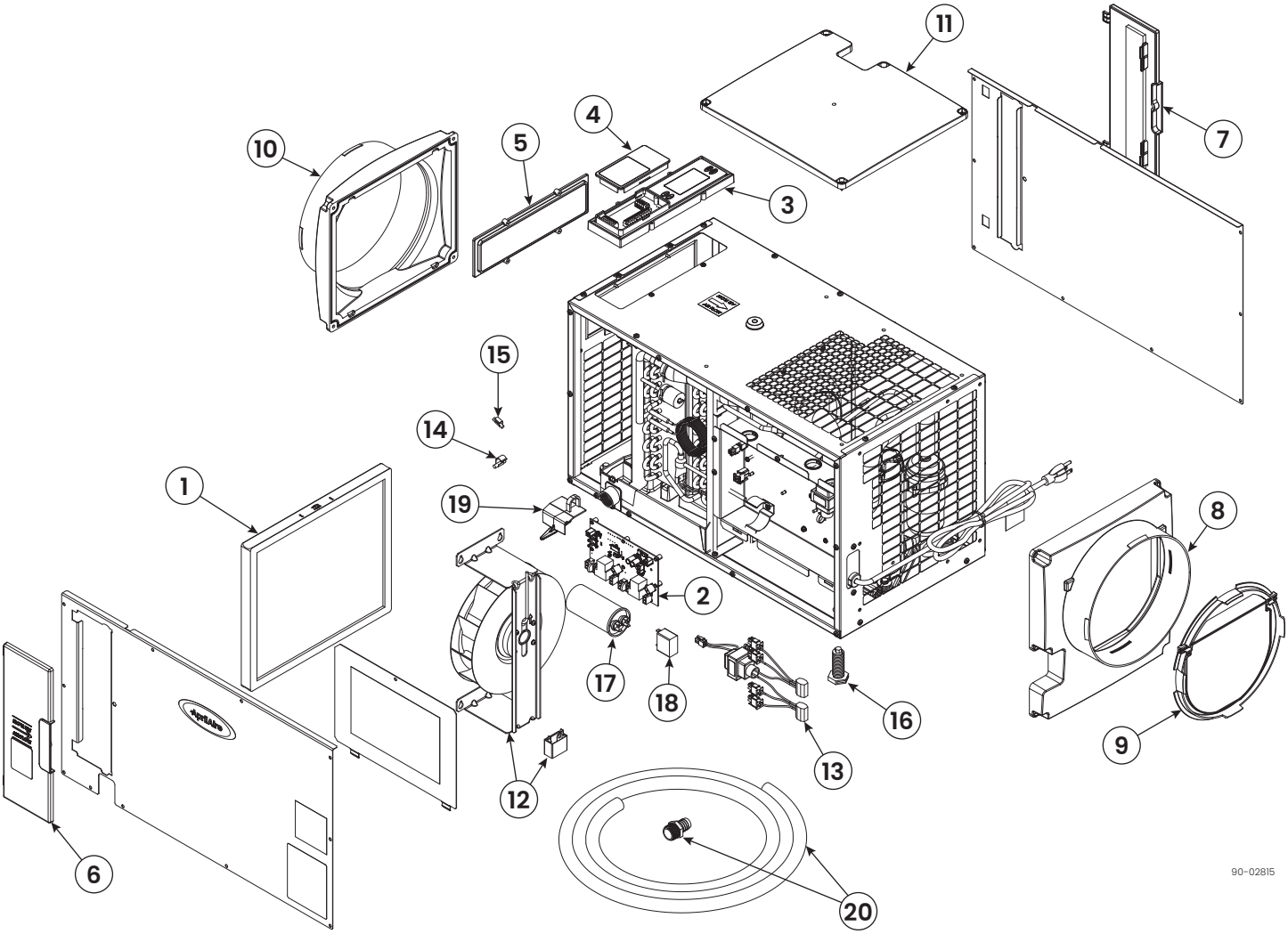

No.	Part Description	Part No.
1	EZK Filter, 13.5" x 11.875" x 0.875"	5881
2	Internal Control Board	5444
3	User Interface Assembly	70000238
4	Wiring Access Door	5446
5	Hole Cover, UI Ctrl	5447
6	Door, Filter Access, Tool Free, Right	70000200
7	Door, Filter Access, Tool Free, Left	70000201
8	Outlet Duct Panel	5449
9	Backflow Damper, 10"	5450
10	Inlet Duct Panel	5451
11	Cover, Outlet	5452
12	Fan, 80pt Deh, with 6MFD Capacitor	5883
	Fan, 100pt Deh, with 12MFD Capacitor	5886

No.	Part Description	Part No.
13	Wire Harness, Power	5884
	Wire Harness, Power, Deh w/ Vent*	5888
14	Sensor, Low Temperature	5455
15	Sensor, High Temperature (if equipped)	5456
16	Leveling Foot (not included with E100C)	5457
17	Capacitor, Run, 50µF	5594
18	Capacitor, 6MFD, 250VAC, 80p	5582
	Capacitor, 12MFD, 450VAC, 100p	5468
19	Drain Insert	5885
20	Drain Tube + Threaded Barbed Fitting	5692
	Threaded Barbed Drain Fitting	5693
NOT SHOWN		
Casters (E100C only)		70000014
Condensate Pump with Tubing		4856

E130W Service Parts

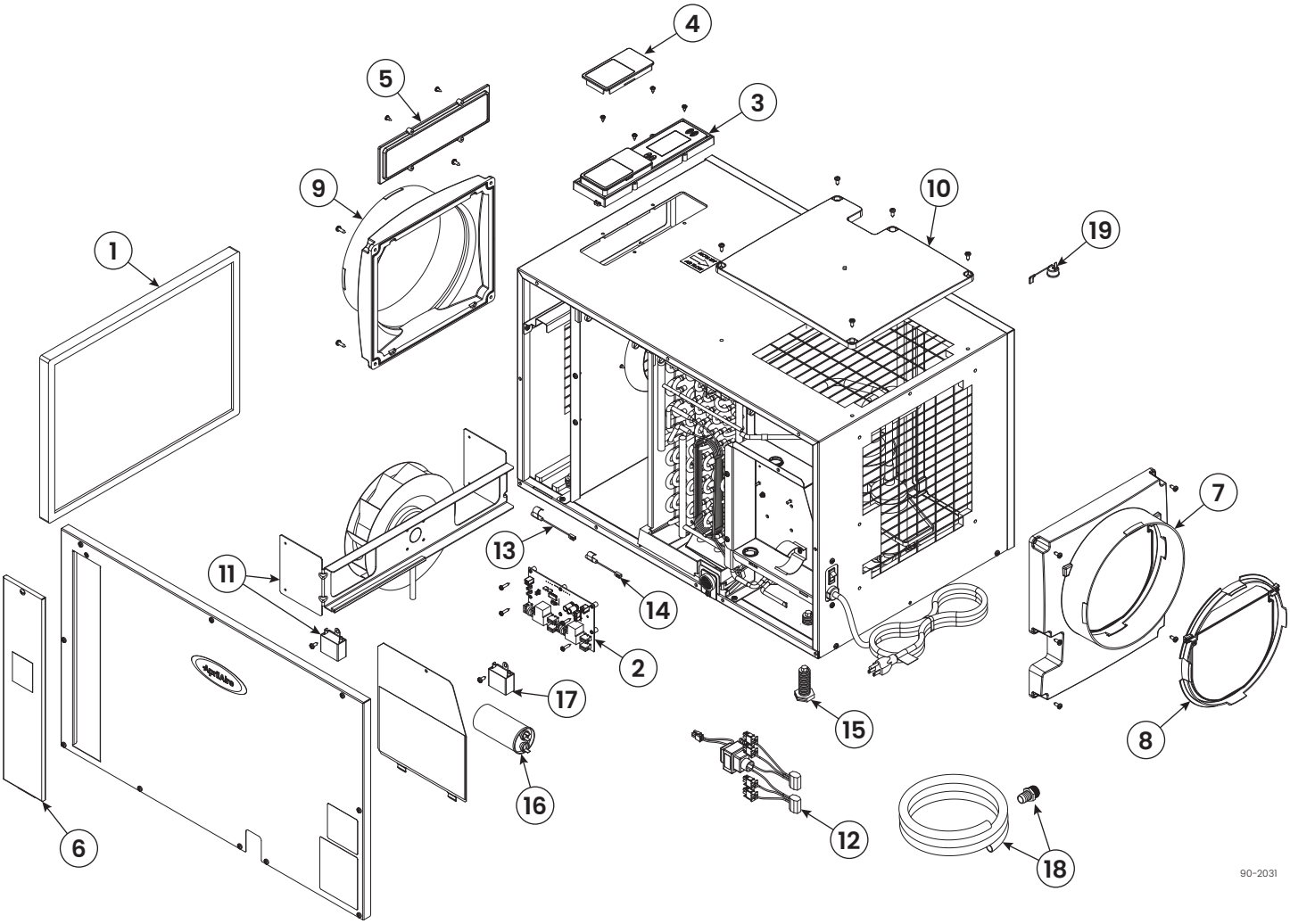

No.	Part Description	Part No.
1	EZK Filter, 14” x 19” x 1”	5569
2	Internal Control Board	5444
3	User Interface Assembly	70000238
4	Wiring Access Door	5446
5	Hole Cover, UI Ctrl	5447
6	Door, Filter Access	5571
7	Outlet Duct Panel	5449
8	Backflow Damper, 10”	5450
9	Inlet Duct Panel	5451
10	Cover, Outlet	5452

No.	Part Description	Part No.
11	Fan, 130pt Deh, with 10MFD Capacitor	5572
12	Transformer and Wire Harness	5454
13	Sensor, Low Temperature	5455
14	Sensor, High Temperature (if equipped)	5456
15	Leveling Foot	5457
16	Capacitor, 50MFD, 370VAC	5594
17	Capacitor, 10MFD, 250VAC	5573
18	Drain Tube + Threaded Barbed Fitting	5692
	Threaded Barbed Drain Fitting	5693
19	Compressor Overload Switch	5574

EULA Statement

This device may include open source software provided by third-parties. This open source software is subject different terms and conditions. You may have a right to download the source code for such open source software. A list of the open source software used in this device may be found here: **https://researchproductscorp.atlassian.net/wiki/external/ZThmOTI0OTJjOWRkNGM0N2JkMzdiNjc4Y2QzNWUxNDY**. All open source software (including any source code) is provided "AS IS" and we make no representations or warranties related to such open source software and disclaim all warranties of any kind, whether express or implied, statutory or otherwise, related to the open source software.

FCC and ISED Compliance Statements

Contains FCC ID: QOQWFM200 and QOQGM210P

Contains IC: 5123A-WFM200 and 5123A-GM210P

This device complies with Part 15 of the FCC Rules and with Innovation, Science and Economic Development Canada's License-exempt RSS standard(s). Operation is subject to the following two conditions:

1. This device may not cause harmful interference, and
2. This device must accept any interference received, including interference that may cause undesired operation.

Changes or modifications not expressly approved by the party responsible for compliance could void the user's authority to operate the equipment.

FCC Interference Statement – Part 15.105 (b)

This equipment has been tested and found to comply with the limits for a Class B digital device, pursuant to Part 15 of the FCC Rules. These limits are designed to provide reasonable protection against harmful interference in a residential installation. This equipment generates, uses and can radiate radio frequency energy and, if not installed and used in accordance with the instructions, may cause harmful interference to radio communications. However, there is no guarantee that interference will not occur in a particular installation. If this equipment does cause harmful interference to radio or television reception, which can be determined by turning the equipment off and on, the user is encouraged to try to correct the interference by one of the following measures:

- Reorient or relocate the receiving antenna.
- Increase the separation between the equipment and receiver.
- Connect the equipment into an outlet on a circuit different from that to which the receiver is connected.
- Consult the dealer or an experienced radio/TV technician for help.

To comply with FCC and Innovation, Science and Economic Development Canada's RF exposure limits for general population/uncontrolled exposure, the antenna(s) used for this transmitter must be installed to provide a separation distance of at least 20 cm from all persons and must not be operating in conjunction with any other antenna or transmitter, except in accordance with FCC multi-transmitter product procedures.

How to Access FCC and IC IDs

The FCC and IC IDs for the modules contained in this device can be viewed by accessing the About Device screen via the menu.

1. Select **Menu**.

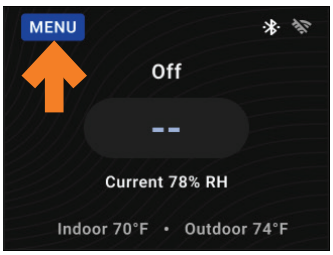

2. Then select **About Device**.

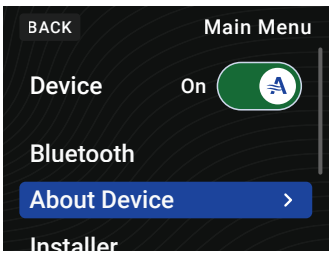

Manufacturing Use Only

Limited Warranty

Terms of Coverage

Your AprilAire® Dehumidifier is expressly warranted to be free from defects in materials or workmanship for five (5) years from date of purchase. The components of your AprilAire Dehumidifier (excluding refrigeration system and drain pan components) will be free of defects in workmanship or materials for a period of six (6) years following the date of purchase.

What Is Covered

The exclusive obligation of AprilAire under this Limited Warranty shall be, at the sole discretion of AprilAire, to supply, without charge, a replacement for any component or product which is found to be defective (excluding refrigeration system and drain pan components). A defective part will be replaced pursuant to this Limited Warranty with a genuine AprilAire part. A defective product will be replaced pursuant to this Limited Warranty with a new AprilAire product of equal or similar features and functionality if the original product has been discontinued or is no longer available.

Not Covered by the Limited Warranty

- Refrigeration System and drain pan components
- Consumable or maintenance products, such as, but not limited to Air Filters.
- Products purchased from third parties that were previously used, such as previously-used products purchased from eBay, similar third party/auction sites, or individuals selling used products.
- Labor charges, shipping costs, removal fees, service fees, or reinstallation costs.
- Materials furnished by the installer.
- Damage caused by misuse, abuse, improper installation, or failing to install, use, or maintain the product in accordance with the instructions provided.
- Damage to HVAC equipment caused by improper installation(s) or misapplication installation(s).
- Modifications, changes, repurposing, or alterations to the AprilAire product.
- Extended warranties or satisfaction guarantees offered by third parties.
- Cosmetic damage or normal wear and tear, including, but not limited to: scratches, peeling finish, or dents that do not impede the mechanical functionality of the product.
- Damage caused by acts of nature, including but not limited to: fire, collision, flood, wind, power surge, lighting strike, or mold.
- Damage caused during transit.
- Damage caused during installation due to failure to follow local, state, or federal laws, statutes, codes, or ordinances.
- Damage caused by defects in materials furnished by the installer.

Limit of Liability

IMPLIED WARRANTIES OF MERCHANTABILITY OR FITNESS FOR A PARTICULAR PURPOSE SHALL BE LIMITED IN DURATION TO THE AFOREMENTIONED EXPRESS WARRANTY PERIOD. APRILAIRE LIABILITY FOR INCIDENTAL OR CONSEQUENTIAL DAMAGES, OTHER THAN DAMAGES FOR PERSONAL INJURIES, RESULTING FROM ANY BREACH OF THE AFOREMENTIONED IMPLIED WARRANTIES OR THE ABOVE LIMITED WARRANTY IS EXPRESSLY EXCLUDED. THIS LIMITED WARRANTY IS VOID IF DEFECT(S) RESULT(S) FROM FAILURE TO INSTALL THE PRODUCT ACCORDING TO THE APRILAIRE INSTALLATION INSTRUCTIONS. IF THE LIMITED WARRANTY IS VOID DUE TO MISAPPLICATION OR IMPROPER INSTALLATION, ALL DISCLAIMERS OF IMPLIED WARRANTIES SHALL BE EFFECTIVE UPON INSTALLATION.

If a product or component is replaced while under warranty, the applicable limited warranty period shall not be extended beyond the original warranty time period.

Some states do not allow limitations on how long an implied warranty lasts or the exclusion or limitation of incidental or consequential damages, so the above limitation(s) may not apply to your situation. This Limited Warranty gives you specific legal rights, and you may also have other rights which vary from state to state.

Register Your AprilAire® Product

Thank you for choosing AprilAire. Register your product at **aprilaire.com/warranty** to receive important updates and notifications, and to streamline the process in the unlikely event you file a claim.

Your warranty registration information will not be sold or shared outside of this company.

Make a Warranty Claim

For questions regarding the Limited Warranty or to initiate a claim, contact AprilAire Customer Service at 1.800.334.6011 Monday through Friday, 7:00 a.m. to 5:00 p.m. Central Time.

At the sole discretion of AprilAire, you may be required to: return the product not later than thirty (30) days after the warranty period to the place of purchase or (if directed) to AprilAire, contact a professional contractor to provide warranty service, submit a product for testing related to a warranty claim, and/or send pictures of the original product with the serial number (if applicable) to AprilAire Technical Support for inspection as a condition to reviewing a claim and/or receiving a replacement product under this Limited Warranty.

AprilAire® is a registered trademark and division of Research Products Corporation, P.O. Box 1467, Madison, WI 53701-1467 USA.

10021212D • 07.26

© 2026 AprilAire | aprilairepartners.com | 800.334.6011

AprilAire reserves the right to change specifications without notice.